蜗 轮 蜗 杆 减 速 机

NMRV WORM GEAR UNITS

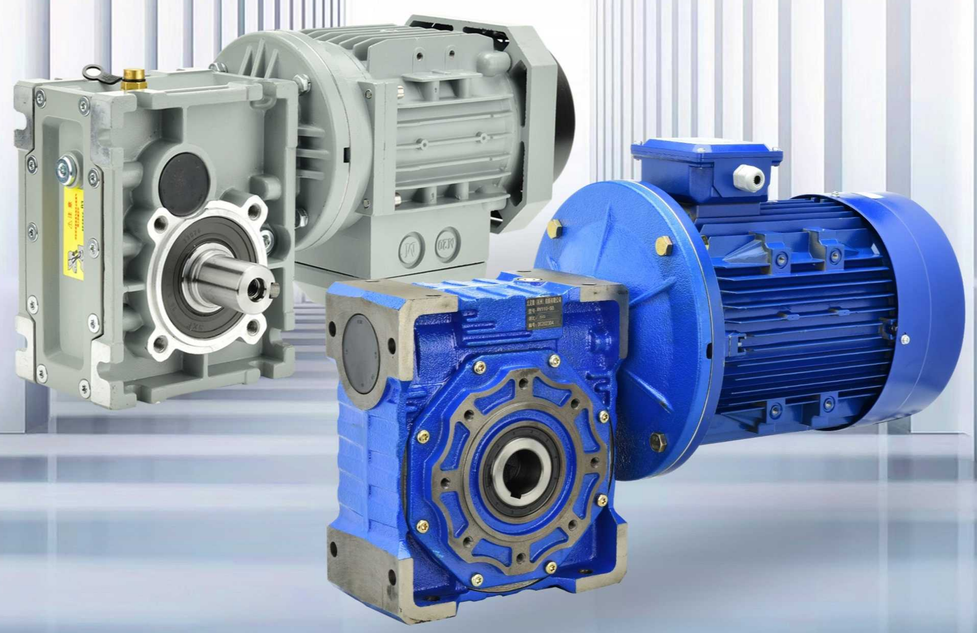

产品型式 / TYPE

NMRV (IEC)

NMRV (ST)

DRV

NRV

蜗轮蜗杆减速机 NMRV MORM GEAR UNITS

结构分解图 / STRUCTURE DIAGRAM

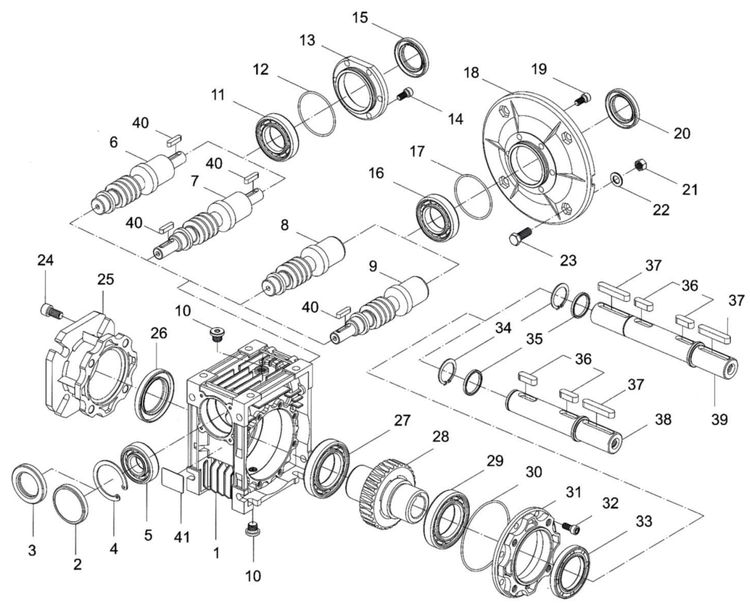

序号 No.	名称 Name	序号 No.	名称 Name
1	箱体 /Cablint	22	垫圈 /Washer
2	油封盖 /Closing cap	23	外六角螺栓 /Six hexagon bolt
3	油封 /Oil seal	24	内六角螺钉 /Inner hex screw
4	孔用挡圈 /Hole-circlip	25	输出法兰 /Output flange
5	轴承 /Bearing	26	油封 /Oil seal
6	轴输入蜗杆 /Input shaft worm	27	轴承 /Bearing
7	双轴输入蜗杆 /Double input worm	28	蜗轮 /Worm gear
8	孔输入蜗杆 /Input hole worm	29	轴承 /Bearing
9	孔输入轴输入蜗杆 /Input shaft and hole worm	30	O 型橡胶密封圈 /O-ring
10	油塞 /Oil plug	31	输出端盖 /Bearing support cover
11	轴承 /Bearing	32	内六角螺钉 /Inner hex screw
12	O 型橡胶密封圈 /O-ring	33	油封 /Oil seal
13	轴承座 /Bearing block	34	轴用挡圈 /Shaft-circlip
14	内六角螺钉 /Inner hex screw	35	垫圈 /Washer
15	油封 /Oil seal	36	键 /Key
16	轴承 /Bearing	37	键 /Key
17	O 型橡胶密封圈 /O-ring	38	单向输出轴 /Single output shaft
18	输入法兰 /Intput flange	39	双向输出轴 /Double output shaft
19	内六角螺钉 /Inner hex screw	40	键 /Key
20	油封 /Oil seal	41	铭牌 /Nameplate
21	外六角螺母 /Six hexagon nut		

产品概述 / SUMMARIZE

结构特点 / STRUCTURE FEATURES

- 优质铝合金铸造箱体，适应全方位的万能安装配置；
- 充分的冷却筋条，使机体具有优良的热传导性能；
- 从 025-150 共 10 种机座规格 ; 传递功率范围从 60W-15kW;
- 速比范围大，每单个机座具有从 5:1 到 100:1 的 12 种减速比；
- 精密磨削加工的硬齿面传动蜗杆，效率高、输出扭矩大；
- 低噪声平稳运转，能适合在恶劣环境中长期连续工作；
- 重量轻，机械强度高；
- 模块化组合 DRV 将 NMRV 减速机的传动比拓展至 :i=5--5000。

- high quality die casting aluminum alloy housing,suitable for universal mounting.
- Heat sink design for cooling provides great surface area and higher thermal capacity than the casting iron housings
- 025 to 150,with power scope from 60W to 15kW.
- Larger speed ratio range . each single frame size has 12 ratios from 5:1 to 100:1
- Hardened worm with fine grinding has zhe features of higher efficiency and big output torque.
- Low noise and stably running,can adapt long term work condition in terrible environments
- Light weight,high mechanical strength.
- Modularization combination DRV extend the ration of NMRV reducers from i=5:1 to 5000:1.

主要材料 / MAIN MATERIALS

- 外壳 : 铝合金 (机座 :025-090), 铸铁 (机座 :110-150);
- 蜗杆 :20Cr, 渗碳淬火 , 齿面硬度 58-62HRC, 精磨后保持渗碳层厚度 0.3-0.5mm;
- 蜗轮：耐磨镍青铜。

- Housing:die-cast aluminum alloy(frame size 025 to 090);cast iron(frame size:110 to 150);
- Worm:20Cr,carbonize&quencher heat treatment make the hardness of gear's surface up to 58-62HRC,retain carburized layer's thickness between 0.3 and 0.5mm after accurate grinding.
- Worm wheel:wearable nickel bronze alloy.

表面涂装 / SURFACE PAINTING

铝合金外壳:

- 先抛丸处理，再经特种防腐处理，保持银白金属感，并耐汽油、二甲苯等有机溶剂的腐蚀；
- 磷化处理后 , 再喷 RAL5010 蓝色或 RAL7035 浅灰色涂料。

铸铁外壳:

先涂红色防锈漆, 后喷涂 RAL5010 蓝色或 RAL7035 浅灰色涂料。

Aluminum Alloy Housing:

- Shot blasting and special antiseptic treat-ment on the aluminum alloy surface;
- After phosphating,paint with RAL5010 blue or RAL7035 grey paint.

Cast Iron Housing:

First paint with red antirust paint,then paint white RAL5010 blue or RAL7035grey paint.

型号说明 / MODEL ILLUMINATE

减速机 / Gear Unit　　电机 / Motor

NMRV 063 / 50 / E / FA1 / SS1 / 71B5 / B3 / 0.37-4P / BMG / 1 / X

1 2 3 4 5 6 7 8 9 10 11 12

No.	说明	Comments
1	减速机系列代号: NMRV: 孔输入带输入法兰 NRV: 轴输入不带输入法兰 DRV: 双蜗轮蜗杆减速机 (NMRV+NMRV/NRV+NMRV)	Code for gear units series: 1.NMRV:Hole input with flange 2.NRV:Shaft input without flange. 3.DRV:Combination worm gear units(NMRV+NMRV/NRV+NMRV)
2	蜗轮蜗杆减速机中心距（规格） NMRV:025,030,040,050,063,075,090,110,130,150 DRV:030/063…….	Central distance of worm gear units(spec) NMRV:025,030,040,050,063,075,090,110,130,150 DRV:030/063…
3	减速机速比 NMRV:i=5,7.5,10,15,20,25,30,40,50,60,80,100 DRV:i=100…..5000	Speed ratio of reducer 1.NMRV:i=5,7.5,10,15,20,25,30,40,50,60,80,100 2.DRV:i=100……5000
4	无代号表示不带蜗杆同向尾出轴 E: 带蜗杆同向尾出轴	1.No mark means single extension worm shaft 2.E:Double extension worm shaft
5	1. 无代号表示不带输出法兰 2. FA,FB,FC,FD,FE(1/2): 输出法兰代号和位置	1.No mark means without output flange 2.FA、FB、FC、FD、FE(1/2):output Flange and position
6	1. 无代号表示孔输出 2. SS(1/2): 单向输出轴和位置 3. DS: 双向输出轴	1.No mark means hole output 2.SS(1/2):Single output shaft and position 3.DS:Double output shaft
7	输入法兰规格形式（不带电机时） 1. 71B5:IEC 输入法兰及规格代号 2. 56C:NEMA 输入法兰及规格代号 3. ST80: 伺服电机输入法兰规格代号	Normalized from of input flange(without motor) 1.71B5:IEC input flange code 2.56C:NEMA input flange code 3.ST80:Servo motor input flange code
8	安装方位代号	Installation position code
9	1. 无代号表示不带电机 2. 0.37-4P: 电机功率、级数 3. 80ST-M01330: 伺服电机型号	1.No mark means without motor 1.0.37-4P:Model motors(poles of power) 2.80ST-M01330:Servo.motor type
10	1. 无代号表示不带制动器 2. BMG: 制动器	1.No mark means without brake 2.BMG:brake
11	电机接线盒位置 , 默认位置 1 可以不写	Position of motor terminal box default position 1 not to write out is ok
12	电机进线位置 , 默认位置 X 可以不写	Coil position for motor,default position X not to write out is ok

注： 订单时请说明是否带电机，一般按不带电机供应。

示例 : NMRV063/60/FA2/80B5

NOTE: When ordering, you should show whether the reducers are equipped with motors, otherwise reducers aren't supplied with motors.

Example: NMRV063/60/FA2/80B5

选型相关参数 / RELEVANT PARAMETER

功率 P

$P_1=P_2 / \eta$ (kW)

$P_{1n} \geq P_1 \cdot fs$ (kW)

P_1 输入功率　　P_2 输出功率

P_{1n} 输入电机额定功率　　fs 服务系数

η 传动效率

在 NMRV 蜗轮蜗杆减速机选型表中，这个功率 P_1 是指在输入转速为 n_1 并且对应的服务系数 fs=1 时，减速机的安全输入功率，单位 kW。传动效率 η 值是减速机经过足够长时间的跑合后计算得到的。跑合后在动转过程中，表面温度下降并最终稳定。需要特别强调的是样本中给定的额定转矩值 M_{2n} 应该考虑到传动效率 η 的关系。

POWER P

$P_1=P_2 / \eta$ (kW)

$P_{1n} \geq P_1 \cdot fs$ (kW)

P_1 Input power　　P_2 Output power

P_{1n} Rated input motor power　　fs Service factor

η Transmission efficiency

The parameter can be found in the NMRV gear-box rating charts and represents the kW that can be safely transmitted to the gearbox, based on input speed $n_1$and service factor fs=1.

Values of η are calculated for gearboxes after a sufficiently in oreration reduces and finally stabilizes. It may be worth high lighting that values of rated torque M_{2n} given in the catalogue take the transmission efficiency η into consideration.

转速 n / Rotation Speed n

n_1 减速机输入转速

n_2 减速机输出转速

若是齿轮箱外部传动装置驱动，为了优化工作条件和提高使用寿命，建议使用 1400r/min 或更低转速。

n_1 Gear units input speed

n_2 Gear units output speed

If driven by the external gearing,1400r/min or lower rotation speed is suggested so as to optimize the working conditions and prolong the service life.

传动比 i / Transmission Ratio i

$i=n_1 / n_2$

扭矩 M / Torque M

$M_2=9550 \cdot P_1 \cdot \eta/n_2$(Nm)

$M_2n \geq M_2 \cdot fs$(Nm)

M_2 输出扭矩

M_2n 额定输出扭矩

P_1 输入功率

η 传动效率

fs 服务系数

$M_2=9550 \cdot P_1 \cdot \eta/n_2$(Nm)

$M_2n \geq M_2 \cdot fs$(Nm)

M_2 Output torque

M_2n Rated output torque

P_1 Input power

η Transmission efficiency

fs Service factor

服务系数 fs / Service Factor fs

减速机上的从动机构的受驱动效果是用服务系数 fs 这个系数来衡量的。该服务系数根据每天的运转时间和启动频率 Z 而定的。三种负载分类取决于惯性加速系数，在下图中可读取实际应用的服务系数，按这图表选取的服务系数必须小于或者等于性能参数表中提供的服务系数。

The effect of the driven machine on the gear unit is taken into account to a sufficient level of accuracy using the service factor fs. The service factor is determined according to the daily operating time and the starting frequency Z. Three load classifications are considered depending on the mass acceleration factor. You can read off the service factor applicable to your application in following figure. The service factor selected using this diagram must be less than or equal to the service factor as given in the performance parameter table.

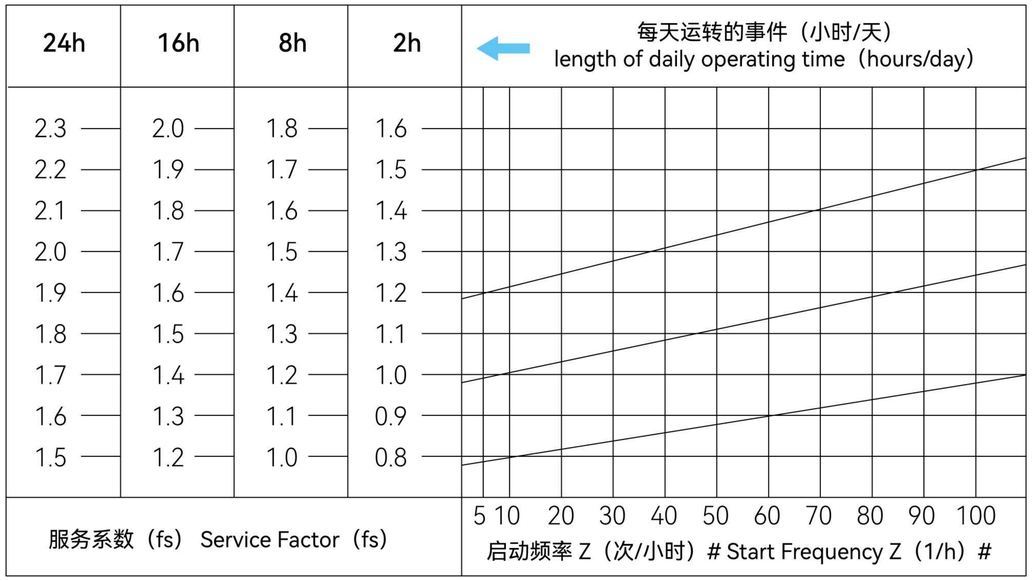

启动频率 Z：周期包括所有启动、制动次数以及变速电机高低速变化时的次数。

Starting frepuency Z:The cycles include all starting and braking procedures as well as change overs from low to high speed.

负载类型 / Load Classifications

负载性质:

A. 均匀冲击负载，允许惯性加速系数 Fa ≤ 0.3

B. 中等冲击负载，允许惯性加速系数 Fa ≤ 3

C. 重冲击负载，允许惯性加速系数 Fa ≤ 10

Type of load:

A. Uniform,permitted mass acceleration factor Fa ≤ 0.3

B. Moderate shock load,permitted mass acceleration factor Fa ≤ 3

C. Heavy shock load,permitted mass acceleration factor Fa ≤ 10

负载类型:

轻负载的螺杆输送，风扇，装备线，输送带，小型搅拌器，电梯，清洗机器，过滤器，控制驱动。

卷扬机，木工机器进料器，货物起重机，平衡器，绞螺纹机器，中型搅拌器，重型输送带，绞盘，滑动闸门，挂料机，包装机械，混凝土搅拌机，行车驱动装置，铣床，齿轮泵。

大型搅拌器，剪床，压机，离心机，旋转支撑装置，重型绞盘和起重机，磨床，石材打磨机，翻斗机，钻床，冲床，凸轮压机，摺床，机床转盘，翻桶装置，振荡装置，破碎机。

Load Classifications:

Screw feeders for light materials,fans,assembly lines,conveyor belts for light materials,small mixers,lifts,cleaning machines,medium mixers,conveyor belts for heavy materials,winches,sliding doors,fertilizer scrapers,packing machines,concrete mixers,crane mechanisms,milling cutters,folding machines,gear pumps.

Mixers for hravy materials,shears,presses centrifuges,rotating supports,winches and lifts for heavy materials,grinding lathes,stone mills,bucket elevators,drilling machines,hammer mills,campresses,folding machines,turntables,tumbling barrels,vibrators,shredders.

惯性加速系数 / Mass Acceleration Factor

惯性加速系数计算如下:

Fa=Jc/Jm

Fa 惯性加速系数

Jc 所有外部传动惯量 (kgm²)

Jm 驱动电机的传动惯量 (kgm²)

如果惯性加速系数 Fa>10，请与我们技术部联系。

受环境温度影响，服务系数 fs 仍须按以下调整:

1. 环境温度 30~40℃ :fs×(1.1~1.2);
2. 环境温度 40~50℃ :fs×(1.3~1.4);
3. 环境温度 50~60℃ :fs×(1.5~1.6);
4. 环境温度 >60℃，请与我们技术服务人员联系。

为了保持减速机的使用寿命，从产品样本中所选择的服务系数 fs 应等于或略高于计算出的服务系数 fs。

The mass acceleration factor is calculated as follows:

Fa=Jc/Jm

Fa Mass acceleration factor

Jc All external mass moments of inertia(kgm²)

Jm Mass moment of inertia on the motor end(kgm²)

If mass acceleration factors fa>10, please call our Technical Service.

Service factor fs should be adjusted as followings:

1. ambient temperature is 30~40℃ :fs×(1.1~1.2);
2. ambient temperature is 40~50℃ :fs×(1.3~1.4);
3. ambient temperature is 50~60℃ :fs×(1.5~1.6);
4. ambient temperature is>60℃ ,please call our Technical Service.

To keep the service-life of gear units,use factor fs selected from the catalogue must be equal or slightly higher than the calculated use factor fs.

径向载荷和轴向载荷 / Overhung Loads And Axial Forces

在决定影响径向载荷时，安装在轴端上的传动件类型必须考虑在内。不同类型的传动对应不同的传动附加系数 fz，列表如下:

When determining the resulting radial loads,the type of transmission elements,mounted on the shaft end must be considered,Varous transmission elements are corresponding with following transmission element factors fz:

传动件 Transmission Element	传动附加系数 fz Transmission Element Factor Fz	注释 Comments
齿轮 Gears	1.00	≥ 17 齿 teeth
	1.15	<17 齿 teeth
链轮 Chain sprockets	1.00	≥ 20 齿 teeth
	1.25	<20 齿 teeth
	1.40	<13 齿 teeth
V 带轮 Narrow V-belt pulleys	1.75	有预紧力作用 Influence of the tensile force
平带轮 Flat belt pulleys	2.50	有预紧力作用 Influence of the tensile force
齿带轮 Toothed belt pulleys	2.50	有预紧力作用 Influence of the tensile force

作用在电机和齿轮轴上的径向载荷按如下公式计算:

$$Fr=\frac{(M\cdot 2000\cdot fz)}{d_0}\ (N)$$

Fr 作用在轴上的载荷 [N]
M 作用在轴上的扭矩 [Nm]
d_0 安装在轴上传动件的平均直径 [mm]
fz 传动附加系数

The overhung loads exerted on the motor or gear shaft is then calculated as follows.

$$Fr=\frac{(M\cdot 2000\cdot fz)}{d_0}\ (N)$$

Fr Resulting radial load [N]
M Torque on the shafts [Nm]
d_0 Mean diameter of the mounted transmission element in [mm]
fz Transmission element factor

当径向负荷不作用在轴中点时，按以下公式计算有效负荷:

$$FxL=\frac{Fr_{(1,2)}\cdot a}{(b+x)}\ [N]$$

Fr2 依据下面表格给出中底脚安装式齿轮减速机的许可径向载荷 (X=L/2) (N)
a,b a,b 减速机径向换算常量 (mm)
X X 轴肩到实际作用点的距离 (mm)

a，b，Fr_2的数值在下面表格给出:

当径向和轴向负载同时存在时，最大的允许轴向负载值只是径向负载值的 1/5，图表中所表示的是输出轴的最大承重量。

The allowed radial load force on the shaft is calculated with the following formula:

$$FxL=\frac{Fr_{(1,2)}\cdot a}{(b+x)}\ [N]$$

Fr1，Fr2 F_{12} Permitted overhung load(X=L/2)for foot-mounted gear units according to the selection tables in(N)
a,b a,b Gear unit constant for overhung load conversion(mm)
X X Distance form the shaft shouldert to the force application point in(mm)

The values of a,b,Fr_2 are biven in the following tables:

The maxium admissible axial loads are 1/5 of the value of the given radial load when they are applied in combination with the radial load. The tables relating to the output shafts give the maximum admissible value.

输出轴径向载荷 / Output Shafts Radial Loads

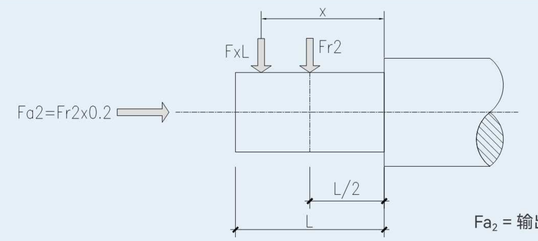

Fa_2 = 输出轴向载荷 Output axial loads

NMRV	025	030	040	050	063	075	090	110	130	150
a	50	65	84	101	120	131	162	176	188	215
b	38	50	64	76	95	101	122	136	148	174
Fr2max	1350	1830	3490	4840	6270	7380	8180	12000	13500	18000

输出轴径向载荷 / Output Shafts Radial Loads

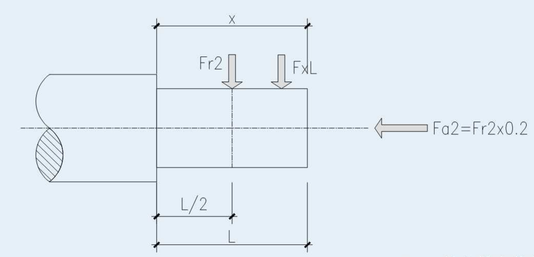

Fa_1 = 输入轴向载荷 Input axial loads

NRV	030	040	050	063	075	090	110	130	150	150
a	86	106	129	159	192	227	266	314	350	215
b	76	94.5	114	139	167	202	236	274	310	174
Fr1max	210	350	490	700	980	1270	1700	2100	2800	18000

选型表注释 / Selection Tables Comments

P_{1n} 电机额定功率 [kW]
n_2 输出转速 [r/min]
M_{2n} 输出扭矩 [Nm]
M_{2max} 最大允许输出扭矩 [Nm]
F_{r2} 输出轴径向载荷 [N]
i 减速机公称传动比
fs 服务系数
减速电机型号
减速机型号
电机型号

P_{1n} Rated power driving motor [kW]
n_2 Output speed [r/min]
M_{2n} Output torque [Nm]
M_{2max} Max permissible output torque[Nm]
F_{r2} Permissible overhung load output side [N]
i Gear unit nominal ratio
fs Service factor
Geared motor type
Gear unit type
Motor type

选型举例分析 / SELECTION EXAMPLE

■ 减速电机 / GEAR MOTOR

例：被驱动设备所需功率 0.5kW,n_1=1400r/min, 均匀冲击负载，启动频率 20 次 / 小时，24 小时连续运行，环境温度 32℃，输出转速 n_2=93.3r/min, 减速电机要求 B3 安装方位，则：

$$i = \frac{n_1}{n_2} = \frac{1400}{93.3} = 15$$

查 P69 页啮合参数表，估计当 i=15 时，η_d=0.82 查看调整服务系数得 fs=1.53×1.12=1.714, $P_{1n} \geq P_2/\eta_d \cdot fs$=0.5/0.82×1.714=1.045(kW), 查 NMRV 系列性能参数表可确定减速电机型号为：

NMRV075/15/B3/1.1-4P，输出扭矩 M_2 计算：

$$M2 = \frac{9550 \cdot P_2}{n_2} = \frac{9550 \times 0.5}{93.3} = 51.18\ (Nm)$$

$$M_{2n} = 95 \geq M_2 \cdot fs = 51.18 \times 1.714 = 87.72(Nm)$$

Exampie:The input power of driver machine is 0.5kW,n_1 =1400r/min,uniform,start up frequency 20(1/h),continuous running for 24hours,the ambient temperature is 32℃ ,n_2 =93.3r/min,B3 mounted so:

$$i = \frac{n_1}{n_2} = \frac{1400}{93.3} = 15$$

Check mash table on P69,estimate when the i=15,η_d=0.82.Check and adjust the service factor,will get fs=1.53×1.12=1.714, $P_{1n} \geq P_2/\eta d \cdot fs$=0.5/0.82×1.714=1.045(kW).

Choose type:**NMRV075/15/B3/1.1-4P**

$$M2 = \frac{9550 \cdot P_2}{n_2} = \frac{9550 \times 0.5}{93.3} = 51.18\ (Nm)$$

$$M_{2n} = 95 \geq M_2 \cdot fs = 51.18 \times 1.714 = 87.72(Nm)$$

■ 减速机 / GEAR UNITS

例：被驱动设备所需扭矩为 300Nm，工作 8 小时连续运行，均匀冲击负载，启动频率 5 次 / 小时，环境温度 30℃，即可选用系数 fs=1.2×1.1=1.32, 减速机输入转速 n_1=900r/min, 输出转速 n_2=22.5r/min。

$$M_{2n} \geq M_2 \cdot fs = 300 \times 1.32 = 396\ (Nm)$$

$$i = \frac{n_1}{n_2} = \frac{900}{22.5} = 40$$

查 NMRV 系列性能参数表可确定减速型号为：

NMRV090/40

Example:Required torque 300Nm on driven machine,con-tinuous running for 8 hours,uniform loda,the ambient tem-perature is 30℃ ,then choose service factor fs=1.2×1.1=1.32,n_1=900r/min,n_2=22.5r/min.

$$M_{2n} \geq M_2 \cdot fs = 300 \times 1.32 = 396\ (Nm)$$

$$i = \frac{n_1}{n_2} = \frac{900}{22.5} = 40$$

Choose type:

NMRV090/40

效率与自锁特性 / Efficiency &Irreversibility Character

效率是减速机一个重要参数，效率 η 的值取决于下列参数：1. 蜗轮蜗杆的螺旋角；2. 输入转速；3. 蜗轮蜗杆的磨合时间；4. 油品、油封和轴承的性能。在第 69 页上的啮合参数表列出了动态效率 (n_1=1400) 及静态效率参数。请注意：这些参数是指减速机磨合后性能稳定的计算值。另外，样本中规定的扭矩 M_{2n} 也是减速机磨合性能稳定的计算值。上述的实际值可能会有上下偏差。

Efficiency is an important parmeter of reducer,efficiency η depends on the following parameters:1. helix angle of gearing;2. driving speed;3. running-in of gearing;4. The performance of oil,oil seal and bearing,the mesh date table on page 69 shows dynamic efficiency(n_1=1400)and static efficiency values. Remember that these values are only achieved after the unit has been run in. Torque values M_{2n} indicated in the catalogue are calculated by considering the steady-state performance of the gearboxes. The actual values mentioned above may be have deflection.

动态自锁 /Dynamic Irreversibilty

动态自锁是指当马达输入突然停止时，输出轴能同步停止。
此条件要求动态效率 η_d<0.4(参见第 69 页表格)

Dynamic irreversibility achieved when the output shaft stops instantly when drive is no longer transmitted through the worm shaft. this condition requires a dynamic efficiency of η_d<0.4(see table on page 69).

静态自锁 / Static Irreversibilty

静态自锁是指当减速机处于静止状态时，输出轴上的负载不能把蜗轮推动。
此条件要求静态效率 η_s<0.5(参见第 69 页表格)

Static irreversibility is achieved when the gear reducer at a standstill. The application of aload to the output shaft can't drive the worm shaft. This condition requires a static efficiency of η_s<0.5(see table on page 69).

n_d	>0.6	0.5~0.6	0.4~0.5	<0.4
动态自锁效果	动态不自锁	动态自锁很低	动态自锁良好	动态自锁
Dynamic Irreversibility	Dynamic Reversibility	Low Dynamic Reversibility	Good Dynamic Irreversibility	Dynamic Irreversibility

n_d	>0.55	0.5~0.55	<0.5
静态自锁效果	静态不自锁	静态自锁很低	静态自锁
Dynamic Irreversibility	Static Reversibility	Low Static Reversibility	Static Irreversibility

上述表格中所有参数只是供大概参考，振动和冲击也会影响减速机的自锁功能。事实上要保证完全自锁是不可能的，我们建议需要时安装外部的安全制动的装置。对于一个组合减速机自锁条件时，必须考虑单减速机的自锁功能效率，因为整体自锁功能是：

$\eta_{tot}=\eta_1 \times \eta_2$

The table shows approximate irreversibility classes. Vibrations and shocks can affect a gear reducer's irreversibility. As it is virtually impossible to provide and guarantee total non reversing,we recommend the use of an external brake with sufficient capability to prevent vibrations in duced starting,where these circumstances are required. For the irreversibility conditions of a combined geared unit one must consider that the efficiency of the group is given by the product of the efficiencies of each single reducer: $\eta_{tot}=\eta_1 \times \eta_2$

NMRV 减速机啮合参数 / MESH DATA

NMRV	i	5	7.5	10	15	20	25	30	40	50	60	80	100
025	Z1	6	4	3	2	2	—	1	1	1	1	—	—
	m	1.1	1.18	1.23	1.27	0.98	—	1.29	0.99	0.80	0.67	—	—
	γ	30° 58'	21° 48'	16° 42'	11° 19'	10° 53'	—	5° 29'	5° 29'	4° 34'	3° 23'	—	—
	η_d(1400)	0.87	0.85	0.83	0.79	0.75	—	0.67	0.62	0.58	0.55	—	—
	n_s	0.72	0.71	0.68	0.61	0.56	—	0.46	0.41	0.36	0.34	—	—
030	Z1	6	4	3	2	2	1	1.5	1	1	1	1	—
	m	1.3	1.36	1.39	1.42	1.09	1.69	1.43	1.10	0.89	0.74	0.56	—
	γ	29° 03'	20° 19'	15° 31'	10° 29'	5° 42'	6° 10'	5° 17'	2° 52'	3° 26'	2° 52'	1° 58'	—
	η_d(1400)	0.87	0.85	0.82	0.77	0.73	0.68	0.65	0.59	0.55	0.51	0.44	—
	n_s	0.72	0.67	0.63	0.55	0.5	0.43	0.39	0.35	0.31	0.27	0.23	—
040	Z1	6	4	3	2	2	2	1	1	1	1	1	1
	m	1.65	1.87	1.95	2.00	1.54	1.26	2.04	1.55	1.27	1.06	0.80	0.65
	γ	30° 58'	21° 48'	16° 42'	11° 19'	11° 19'	8° 08'	5° 43'	5° 43'	4° 05'	2° 52'	2° 52'	2° 29'
	η_d(1400)	0.89	0.87	0.85	0.82	0.78	0.75	0.7	0.65	0.62	0.58	0.52	0.47
	n_s	0.74	0.71	0.67	0.6	0.55	0.51	0.45	0.4	0.36	0.32	0.28	0.24
050	Z1	6	4	3	2	2	2	1	1	1	1	1	1
	m	2.25	2.34	2.43	2.50	1.92	1.56	2.54	1.94	1.58	1.32	1.00	0.80
	γ	30° 58'	21° 48'	16° 42'	11° 19'	11° 19'	9° 05'	5° 43'	5° 43'	4° 21'	2° 52'	2° 52'	2° 17'
	η_d(1400)	0.89	0.88	0.86	0.82	0.79	0.76	0.72	0.67	0.63	0.59	0.53	0.49
	n_s	0.74	0.7	0.66	0.59	0.55	0.51	0.44	0.39	0.35	0.32	0.27	0.23
063	Z1	—	4	3	2	2	2	1	1	1	1	1	1
	m	—	2.96	3.08	3.17	2.44	1.98	3.23	2.47	1.99	1.68	1.27	1.02
	γ	—	24° 31'	18° 53'	12° 51'	11° 19'	8° 45'	6° 30'	5° 43'	4° 24'	3° 03'	2° 52'	2° 12'
	η_d(1400)	—	0.88	0.87	0.83	0.81	0.78	0.72	0.7	0.66	0.62	0.57	0.51
	n_s	—	0.71	0.67	0.6	0.55	0.51	0.45	0.4	0.36	0.33	0.28	0.24
075	Z1	—	4	3	2	2	2	1	1	1	1	1	1
	m	—	3.53	3.70	3.83	2.94	2.39	3.92	2.99	2.41	2.02	1.54	1.24
	γ	—	28° 04'	21° 48'	14° 56'	11° 19'	11° 19'	7° 36'	5° 43'	5° 43'	3° 49'	4° 21'	2° 52'
	η_d(1400)	—	0.89	0.88	0.85	0.82	0.80	0.76	0.72	0.69	0.65	0.60	0.55
	n_s	—	0.71	0.68	0.61	0.57	0.53	0.46	0.42	0.38	0.35	0.29	0.26
090	Z1	—	4	3	2	2	2	1	1	1	1	1	1
	m	—	4.23	4.47	4.66	3.60	2.93	4.79	3.67	2.97	2.49	1.89	1.52
	γ	—	33° 41'	26° 34'	18° 26'	14° 02'	11° 19'	9° 28'	7° 08'	5° 43'	4° 46'	3° 53'	2° 52'
	η_d(1400)	—	0.9	0.89	0.86	0.84	0.82	0.78	0.75	0.72	0.69	0.63	0.59
	n_s	—	0.73	0.7	0.64	0.6	0.56	0.49	0.45	0.41	0.38	0.32	0.28
110	Z1	—	4	3	2	2	2	1	1	1	1	1	1
	m	—	5.18	5.45	5.67	4.47	3.64	5.82	4.58	3.71	3.12	2.36	1.91
	γ	—	28° 46'	22° 22'	15° 21'	14° 20'	14° 02'	7° 49'	7° 17'	• 7° 08'	5° 48'	4° 54'	3° 37'
	η_d(1400)	—	0.9	0.89	0.86	0.85	0.84	0.79	0.78	0.75	0.72	0.67	0.63
	n_s	—	0.72	0.69	0.63	0.62	0.59	0.48	0.48	0.44	0.41	0.36	0.32
130	Z1	—	4	3	2	2	2	1	1	1	1	1	1
	m	—	6.11	6.45	6.72	5.24	4.28	6.91	5.36	4.35	3.65	2.76	2.23
	γ	—	29° 15'	22° 47'	15° 39'	13° 47'	12° 24'	7° 58'	7° 00'	6° 17'	6° 07'	3° 56'	3° 41'
	η_d(1400)	—	0.91	0.89	0.87	0.86	0.84	0.8	0.78	0.75	0.72	0.68	0.64
	n_s	—	0.72	0.69	0.63	0.61	0.58	0.49	0.46	0.43	0.39	0.34	0.3
150	Z1	—	6	4	3	2	2	2	1	1	1	1	1
	m	—	5.55	6.155	5.55	6.155	5	4.19	6.155	5	4.19	3.16	2.55
	γ	—	29° 37'	24° 41′	15° 32'	12° 56'	11° 19'	9° 56'	6° 34'	5° 43'	5° 00'	3° 45'	2° 52'
	η_d(1400)	—	0.91	0.9	0.88	0.86	0.84	0.83	0.78	0.76	0.73	0.68	0.64
	n_s	—	0.73	0.71	0.66	0.6	0.57	0.54	0.45	0.42	0.39	0.33	0.29

备注： i- 速比 ,Z1- 蜗杆头数 ,γ- 导程角 ,m- 模数 ,η_d- 动态效率 ,η_s- 动态效率。

NOTE : i-ratio, Z1-number of teeth, γ-helical angle, m-modulus, η_d-dynamic efficiency, η_s-static efficiency.

NMRV 减速机选型表 / GEAR UNIT SELECTION TABLES

NMRV 减速机组合表 （n_1=1400r/min）
NMRV Possible geometrical combinations （n_1=1400r/min）

NMRV	ST	5	7.5	10	15	20	25	30	40	50	60	80	100
025	60W						NO						
	90W						NO						
030	60W												
	90W												
	120W												
	180W												
040	60W	●	●	●	●	●	●	●	●				
	90W	●	●	●	●	●	●	●	●				
	120W												
	180W												
	250W												
	370W												
	550W												
050	120W	●	●	●	●	●	●	●					
	180W	●	●	●	●	●	●	●					
	250W												
	370W												
	550W												
	750W												
063	250W	X	●	●	●	●	●	●	●	●	●	●	
	370W	X	●	●	●	●	●	●	●				
	550W	X											
	750W	X											
	1100W	X											
	1500W	X											
075	550W	X	●	●	●	●	●	●					
	750W	X	●	●	●	●	●						
	1100W	X											
	1500W	X											
	2200W	X											
	3000W	X											
	4000W	X											

NMRV	ST	5	7.5	10	15	20	25	30	40	50	60	80	100
090	750W	X	●	●	●	●	●	●	●				
	1100W	X	●	●	●	●	●	●					
	1500W	X	●	●	●	●							
	2200W	X											
	3000W	X											
	4000W	X											
110	1100W	X	●	●	●	●	●	●	●	●			
	1500W	X	●	●	●	●	●	●	●				
	2200W	X											
	3000W	X											
	4000W	X											
	5500W	X											
	7500W	X											
130	1500W	X	●	●	●	●	●	●	●	●	●		
	2200W	X	●	●	●	●	●	●	●				
	3000W	X	●	●	●	●	●	●					
	4000W	X											
	5500W	X											
	7500W	X											
150	2200W	X	●	●	●	●	●	●	●				
	3000W	X	●	●	●	●	●	●					
	4000W	X	●	●	●	●							
	5500W	X	●	●	●								
	7500W	X	●	●	●								
	11000W	X											
	15000W	X											

注：● 表示允许但不推荐的配置，空格部分为不允许的配置，X 表示无此速比规格。

NOTE : ● Means allowed but not recommended configurations,space parts means unallowed configurations, X means no this ratio.

NMRV+ST 伺服减速机组合表 (n_1=1500r/min)
NMRV+ST Servo gear unit possible geometrical combinations (n_1=1500r/min)

NMRV	ST	5	7.5	10	15	20	25	30	40	50	60	80	100
040	100W												
	200W												
050	100W	●	●	●	●	●	●	●					
	200W	●	●	●	●	●	●	●					
	400W												
	500W												
	750W												
063	200W	X	●	●	●	●	●	●	●	●	●		
	400W	X	●	●	●	●	●	●					
	500W	X	●	●									
	750W	X											
	1000W	X											
	1500W	X											
075	500W	X	●	●	●	●	●	●					
	750W	X	●	●	●	●	●						
	1000W	X											
	1500W	X											
	2000W	X											
	3000W	X											
	4000W	X											
090	750W	X	●	●	●	●	●	●	●				
	1000W	X	●	●	●	●	●	●					
	1500W	X	●	●	●	●							
	2000W	X											
	3000W	X											
	4000W	X											
110	1000W	X	●	●	●	●	●	●	●	●			
	1500W	X	●	●	●	●	●	●	●				
	2000W	X											
	3000W	X											
	4000W	X											
	5000W	X											
	7500W	X											

NMRV	ST	5	7.5	10	15	20	25	30	40	50	60	80	100
130	1500W	X	●	●	●	●	●	●	●	●	●		
	2000W	X	●	●	●	●	●	●	●				
	3000W	X	●	●	●	●	●	●					
	4000W	X											
	5000W	X											
	7500W	X											
150	2000W	X	●	●	●	●	●	●	●				
	3000W	X	●	●	●	●	●	●					
	4000W	X	●	●	●	●							
	5000W	X	●	●	●								
	7500W	X	●	●	●								
	11000W	X											
	15000W	X											

注：● 表示允许但不推荐的配置，空格部分为不允许的配置，X 表示无此速比规格。

NOTE : ● Means allowed but not recommended configurations,space parts means unallowed configurations, X means no this ratio.

NMRV+NEMA 减速机组合表 / Possible geometrical combinations

NMRV	NEMA Flange	Available Ratios											
		5	7.5	10	15	20	25	30	40	50	60	80	100
030	48C												
040	56C												
050	56C												
063	56C												
	140TC												
075	56C												
	140TC												
	180TC												
090	56C												
	140TC												
	180TC												
110	56C												
	140TC												
	180TC												
	210TC												
130	56C												
	140TC												
	180TC												
	210TC												
150	180TC												
	210TC												

NMRV 性能参数 / PERFORMANCE PARAMETER

NMRV... IEC... 性能参数 / Performance Parameter

P_{1n} [kW]	n_2 [r/min]	i	M_{2n} [Nm]	F_{r2} [N]	fs		
0.06	280	5	1.8	439	6.2	NMRV025 56B14	5614
	186.7	7.5	2.6	503	4.2		
	140	10	3.4	553	3.5		
	93.3	15	4.9	633	2.5		
	70	20	6.2	697	1.9		
	46.7	30	8.3	798	1.6		
	35	40	10	878	1.2		
	28	50	12	946	0.9		
	23.3	60	14	1006	0.7		
	186.7	7.5	2.6	683	7.0	NMRV030 56B5/B14	5614
	140	10	3.4	752	5.4		
	93.3	15	4.7	861	3.9		
	70	20	6	948	3.1		
	56	25	7	1021	3.1		
	46.7	30	8	1085	2.5		
	35	40	9.7	1194	1.9		
	28	50	11	1286	1.5		
	23.3	60	13	1367	1.3		
	17.5	80	14	1504	0.9		
0.09	373.3	7.5	2.0	399	3.9	NMRV025 56B14	5612
	280	10	2.6	439	3.4		
	186.7	15	3.8	503	2.4		
	140	20	4.9	553	1.8		
	93.3	30	6.7	633	1.3		
	70	40	8.5	697	1.1		
	56	50	10	751	0.9		
	186.7	7.5	3.9	503	2.8	NMRV025 56B14	5624
	140	10	5.1	553	2.4		
	93.3	15	7.3	633	1.6		
	70	20	9.3	697	1.3		
	46.7	30	13	798	1.0		
	35	40	16	878	0.8		
	373.3	7.5	2.0	542	6.5	NMRV030 56B5/B14	5612
	280	10	2.6	597	5.0		
	186.7	15	3.7	683	3.5		
	140	20	4.7	752	2.5		
	112	25	5.5	810	2.9		
	93.3	30	6.4	861	2.3		

P_{1n} [kW]	n_2 [r/min]	i	M_{2n} [Nm]	F_{r2} [N]	fs		
0.09	70	40	8.0	948	1.8	**NMRV030 56B5/B14**	**5612**
	56	50	9.4	1021	1.4		
	46.7	60	10	1085	1.1		
	35	80	13	1194	0.9		
	186.7	7.5	3.9	683	4.7	**NMRV030 56B5/B14**	**5624**
	140	10	5.0	752	3.6		
	93.3	15	7.0	861	2.6		
	70	20	8.8	948	2.0		
	56	25	10	1021	2.1		
	46.7	30	12	1085	1.7		
	35	40	14	1194	1.2		
	28	50	17	1286	1.0		
	23.3	60	18	1367	0.9		
	28	50	19	2475	2.1	**NMRV040 56B5**	**5624**
	23.3	60	21	2630	1.7		
	17.5	80	25	2895	1.3		
	14	100	29	3118	1.0		
0.12	373.3	7.5	2.7	399	3.0	**NMRV025 56B14**	**5622**
	280	10	3.5	439	2.6		
	186.7	15	5.1	503	1.8		
	140	20	6.5	553	1.4		
	93.3	30	9.0	633	1.0		
	70	40	11	697	0.8		
	186.7	7.5	5.2	683	3.5	**NMRV030 63B5/B14**	**6314**
	140	10	6.6	752	2.7		
	93.3	15	9.3	861	1.9		
	70	20	12	948	1.5		
	56	25	14	1021	1.6		
	46.7	30	16	1085	1.3		
	35	40	19	1194	0.9		
	28	50	22	1286	0.8		
	46.7	30	17	2087	2.7	**NMRV040 63B5/B14**	**6314**
	35	40	21	2298	1.9		
	28	50	25	2475	1.6		
	23.3	60	28	2630	1.3		
	17.5	80	33	2895	1.0		
	14	100	38	3118	0.8		
	23.3	60	29	3610	2.3		
	17.5	80	35	3973	1.9		
	14	100	39	4280	1.4		

P_{1n} [kW]	n_2 [r/min]	i	M_{2n} [Nm]	F_{r2} [N]	fs		
0.18	373.3	7.5	4.0	542	3.2	**NMRV030 63B5/B14**	**6312**
	280	10	5.2	597	2.5		
	186.7	15	7.4	683	1.8		
	140	20	9.5	752	1.3		
	112	25	11	810	1.4		
	93.3	30	13	861	1.2		
	70	40	16	948	0.9		
	186.7	7.5	7.7	683	2.3	**NMRV030 63B5/B14**	**6324**
	140	10	10	752	1.8		
	93.3	15	14	861	1.3		
	70	20	18	948	1.0		
	56	25	20	1021	1.0		
	46.7	30	24	1085	0.8		
	93.3	30	14	1657	2.5	**NMRV040 63B5/B14**	**6312**
	70	40	17	1824	1.8		
	56	50	21	1964	1.4		
	70	20	19	1824	2.1	**NMRV040 63B5/B14**	**6324**
	56	25	23	1964	1.7		
	46.7	30	25	2087	1.8		
	35	40	32	2298	1.3		
	28	50	37	2475	1.0		
	23.3	60	42	2630	0.9		
	45	20	28	2113	1.6	**NMRV040 71B5/B14**	**7116**
	36	25	34	2276	1.3		
	30	30	38	2419	1.3		
	22.5	40	47	2662	1.0		
	46.7	60	24	2865	2.1	**NMRV050 63B5**	**6312**
	35	80	30	3153	1.5		
	28	100	34	3397	1.2		
	35	40	33	3153	2.3	**NMRV050 63B5**	**6324**
	28	50	39	3397	1.9		
	23.3	60	43	3610	1.6		
	17.5	80	52	3973	1.2		
	14	100	59	4280	0.9		
	18	50	56	3936	1.4	**NMRV050 71B5/B14**	**7116**
	15	60	63	4183	1.1		
	11.3	80	75	4604	0.9		
	15	60	66	5467	2.1	**NMRV063 71B5/B14**	**7116**
	11.3	80	79	6018	1.6		
	9	100	90	6270	1.4		

P_{1n} [kW]	n_2 [r/min]	i	M_{2n} [Nm]	F_{r2} [N]	fs		
0.25	373.3	7.5	5.6	542	2.3	**NMRV030 63B5/B14**	**6322**
	280	10	7.2	597	1.8		
	186.7	15	10	683	1.3		
	140	20	13	752	0.9		
	112	25	15	810	1.0		
	93.3	30	18	861	0.8		
	186.7	7.5	11	1315	3.6	**NMRV040 71B5/B14**	**7114**
	140	10	14	1447	2.8		
	93.3	15	20	1657	2.0		
	70	20	26	1824	1.5		
	56	25	32	1964	1.2		
	46.7	30	35	2087	1.3		
	35	40	44	2298	0.9		
	120	7.5	17	1524	2.6	**NMRV040 71B5/B14**	**7126**
	90	10	22	1677	2.0		
	60	15	31	1920	1.4		
	45	20	39	2113	1.1		
	36	25	48	2276	0.9		
	30	30	53	2419	0.9		
	35	80	42	3153	1.1	**NMRV050 63B5/B14**	**6322**
	28	100	48	3397	0.8		
	70	20	27	2503	2.7	**NMRV050 71B5/B14**	**7114**
	56	25	32	2696	2.2		
	46.7	30	36	2865	2.3		
	35	40	46	3153	1.7		
	28	50	54	3397	1.4		
	23.3	60	60	3610	1.1		
	17.5	80	72	3973	0.9		
	45	20	40	2900	1.9	**NMRV050 71B5/B14**	**7126**
	36	25	48	3124	1.5		
	30	30	54	3320	1.7		
	22.5	40	67	3654	1.2		
	18	50	78	3936	1.0		
	15	60	88	4183	0.8		
	28	50	55	4440	2.4	**NMRV063 71B5/B14**	**7114**
	23.3	60	63	4719	2.0		
	17.5	80	76	5193	1.6		
	14	100	87	5595	1.4		

P_{1n} [kW]	n_2 [r/min]	i	M_{2n} [Nm]	F_{r2} [N]	fs		
0.25	18	50	81	5145	1.8	**NMRV063 71B5/B14**	**7126**
	15	60	92	5467	1.5		
	11.3	80	110	6018	1.2		
	9	100	125	6270	1.0		
	17.5	80	80	6130	2.4	**NMRV075 71B5**	**7114**
	14	100	94	6603	1.9		
	11.3	80	117	7103	1.7	**MRV075 71B5**	**7126**
	9	100	133	7380	1.4		
0.37	373.3	7.5	8.3	1044	3.4	**NMRV040 71B5/B14**	**7112**
	280	10	11	1149	2.6		
	186.7	15	16	1315	1.9		
	140	20	20	1447	1.4		
	112	25	25	1559	1.1		
	186.7	7.5	16	1315	2.5	**NMRV040 71B5/B14**	**7124**
	140	10	21	1447	1.9		
	93.3	15	30	1657	1.3		
	70	20	39	1824	1.0		
	56	25	47	1964	0.8		
	46.7	30	52	2087	0.9		
	112	25	25	2140	2.0	**NMRV050 71B5/B14**	**7112**
	93.3	30	29	2274	2.2		
	70	40	37	2503	1.6		
	56	50	44	2696	1.2		
	46.7	60	50	2865	1.0		
	35	80	62	3153	0.7		
	140	10	21	1987	3.4	**NMRV050 71B5/B14**	**7124**
	93.3	15	31	2274	2.4		
	70	20	39	2503	1.9		
	56	25	47	2696	1.5		
	46.7	30	54	2865	1.6		
	35	40	68	3153	1.1		
	28	50	80	3397	0.9		
	23.3	60	89	3610	0.8		
	120	7.5	25	2091	3.4	**NMRV050 80B5/B14**	**8016**
	90	10	33	2302	2.6		
	60	15	47	2635	1.8		
	45	20	59	2900	1.3		
	36	25	72	3124	1.0		
	30	30	80	3320	1.1		

P_{1n} [kW]	n_2 [r/min]	i	M_{2n} [Nm]	F_{r2} [N]	fs		
0.37	35	40	70	4122	2.1	NMRV063 71B5/B14	7124
	28	50	82	4440	1.6		
	23.3	60	94	4719	1.4		
	17.5	80	113	5193	1.1		
	14	100	129	5595	0.9		
	45	20	60	3791	2.4	NMRV063 80B5/B14	8016
	36	25	73	4084	1.9		
	30	30	82	4339	2.1		
	22.5	40	102	4776	1.6		
	18	50	120	5145	1.2		
	15	60	137	5467	1.0		
	23.3	60	97	5569	2.1	NMRV075 71B5	7124
	17.5	80	119	6130	1.6		
	14	100	139	6603	1.3		
	18	50	124	6073	1.8	NMRV075 80B5/B14	8016
	15	60	141	6453	1.5		
	11.3	80	173	7103	1.2		
	9	100	196	7380	1.0		
	11.3	80	185	7859	1.7	NMRV090 80B5/B14	8016
	9	100	212	8180	1.3		
0.55	373.3	7.5	12	1044	2.3	NMRV040 71B5/B14	7122
	280	10	16	1149	1.8		
	186.7	15	24	1315	1.3		
	140	20	30	1447	1.0		
	112	25	37	1559	0.8		
	140	20	31	1987	1.7	NMRV050 71B5/B14	7122
	112	25	38	2140	1.4		
	93.3	30	43	2274	1.5		
	70	40	55	2503	1.1		
	56	50	65	2696	0.8		
	46.7	60	74	2865	0.7		
	186.7	7.5	24	1805	2.9	NMRV050 80B5/B14	8014
	140	10	32	1987	2.3		
	93.3	15	46	2274	1.6		
	70	20	59	2503	1.2		
	56	25	70	2696	1.0		
	46.7	30	80	2865	1.1		

P_{1n} [kW]	n_2 [r/min]	i	M_{2n} [Nm]	F_{r2} [N]	fs		
0.55	120	7.5	37	2091	2.3	NMRV050 80B5/B14	8026
	90	10	48	2302	1.7		
	60	15	69	2635	1.2		
	45	20	88	2900	0.9		
	70	40	56	3272	1.9	NMRV063 71B5/B14	7122
	56	50	68	3524	1.5		
	46.7	60	78	3745	1.2		
	35	80	96	4122	0.9		
	28	100	111	4440	0.7		
	70	20	60	3272	2.2	NMRV063 80B5/B14	8014
	56	25	72	3524	1.8		
	46.7	30	82	3745	1.9		
	35	40	104	4122	1.4		
	28	50	122	4440	1.1		
	23.3	60	140	4719	0.9		
	60	15	70	3444	2.2	NMRV063 80B5/B14	8026
	45	20	90	3791	1.6		
	36	25	108	4084	1.3		
	30	30	123	4339	1.4		
	22.5	40	152	4776	1.1		
	35	80	99	4865	1.3	NMRV075 71B5	7122
	28	100	116	5241	1.0		
	35	40	108	4865	2.0	NMRV075 80B5/B14	8014
	28	50	128	5241	1.6		
	23.3	60	144	5569	1.4		
	17.5	80	177	6130	1.1		
	14	100	206	6603	0.9		
	30	30	124	5122	2.1	NMRV075 80B5/B14	8026
	22.5	40	156	5637	1.5		
	18	50	184	6073	1.2		
	15	60	210	6453	1.0		
	.17.5	80	189	6783	1.5	NMRV090 80B5/B14	8014
	14	100	221	7306	1.2		
	18	50	196	6719	2.0	NMRV090 80B5/B14	8026
	15	60	224	7140	1.6		
	11.3	80	275	7859	1.1		
	9	100	315	8180	0.9		
	17.5	80	201	8571	2.6	NMRV110 80B5	8014
	14	100	236	9232	2.0		
	11.3	80	294	9931	1.9		
	9	100	344	10320	1.5		

P_{1n} [kW]	n_2 [r/min]	i	M_{2n} [Nm]	F_{r2} [N]	fs		
0.75	373.3	7.5	17	1433	3.0	NMRV050 80B5/B14	8012
	280	10	22	1577	2.4		
	186.7	15	31	1805	1.7		
	140	20	41	1987	1.3		
	112	25	49	2140	1.0		
	93.3	30	56	2274	1.1		
	280	5	23	1577	2.7	NMRV050 80B5/B14	8024
	186.7	7.5	33	1805	2.1		
	140	10	43	1987	1.7		
	93.3	15	62	2274	1.2		
	70	20	80	2503	0.9		
	140	20	43	2597	2.3	NMRV063 80B5/B14	8012
	112	25	52	2797	1.8		
	93.3	30	60	2973	2.0		
	70	40	77	3272	1.4		
	56	50	92	3524	1.1		
	46.7	60	106	3745	0.9		
	93.3	15	63	2973	2.2	NMRV063 80B5/B14	8024
	70	20	82	3272	1.6		
	56	25	98	3524	1.3		
	46.7	30	112	3745	1.4		
	35	40	141	4122	1.0		
	120	7.5	51	2734	2.9	NMRV063 90B5/B14	90S6
	90	10	67	3009	2.3		
	60	15	96	3444	1.6		
	45	20	123	3791	1.2		
	36	25	147	4084	0.9		
	30	30	167	4339	1.0		
	46.7	60	107	4421	1.3	NMRV075 90B5/B14	8012
	35	80	135	4865	1.0		
	28	100	159	5241	0.8		
	56	25	101	4160	2.0	NMRV075 90B5/B14	8024
	46.7	30	117	4421	2.0		
	35	40	147	4865	1.5		
	28	50	174	5241	1.2		
	23.3	60	196	5569	1.0		
	46.7	30	80	2865	1.1	NMRV075 90B5/B14	90S6
	60	15	97	4065	2.4		
	45	20	124	4474	1.9		
	36	25	149	4820	1.4		
	30	30	170	5122	1.5		
	22.5	40	213	5637	1.1		

P_{1n} [kW]	n_2 [r/min]	i	M_{2n} [Nm]	F_{r2} [N]	fs		
0.55	45	20	124	4474	1.9	NMRV075 90B5/B14	90S6
	36	25	149	4820	1.4		
	30	30	170	5122	1.5		
	22.5	40	213	5637	1.1		
	35	80	143	5383	1.6	NMRV090 80B5/B14	8012
	28	100	169	5799	1.2		
	28	50	182	5799	1.9	NMRV090 80B5/B14	8024
	23.3	60	209	6163	1.5		
	17.5	80	258	6783	1.1		
	14	100	302	7306	0.9		
	30	30	179	5667	2.6	NMRV090 80B5/B14	90S6
	22.5	40	226	6238	1.8		
	18	50	267	6719	1.5		
	15	60	306	7140	1.1		
	17.5	80	274	8571	1.9	NMRV110 80B5	8024
	14	100	322	9232	1.5		
	15	60	325	9023	2.1	NMRV110 90B5	90S6
	11.3	80	401	9931	1.4		
	9	100	470	10320	1.1		
	11.3	80	401	12989	2.1	NMRV130 90B5	90S6
	9	100	470	13500	1.7		
1.1	373.3	7.5	25	1433	2.1	NMRV050 80B5/B14	8022
	280	10	33	1577	1.7		
	186.7	15	48	1805	1.2		
	140	20	62	1987	0.9		
	186.7	15	46	2359	2.1	NMRV063 80B5/B14	8022
	140	20	60	2597	1.6		
	112	25	72	2797	1.2		
	93.3	30	82	2973	1.4		
	70	40	104	3272	1.0		
	120	7.5	75	2734	2.0	NMRV063 90B5/B14	90L6
	90	10	98	3009	1.6		
	60	15	140	3444	1.1		
	45	20	180	3791	0.8		
	186.7	7.5	50	2359	2.6	NMRV063 90B5/B14	90S4
	140	10	65	2597	2.0		
	93.3	15	92	2973	1.5		
	70	20	120	3272	1.1		
	56	25	144	3524	0.9		
	46.7	30	164	3745	1.0		

P_{1n} [kW]	n_2 [r/min]	i	M_{2n} [Nm]	F_{r2} [N]	fs		
1.1	112	25	77	3302	2.0	NMRV075 80B5/B14	8022
	93.3	30	89	3509	1.9		
	70	40	114	3862	1.4		
	56	50	137	4160	1.1		
	46.7	60	158	4421	0.9		
	90	10	98	3551	2.3	NMRV075 90B5/B14	90L6
	60	15	142	4065	1.7		
	45	20	182	4474	1.3		
	36	25	19	4820	1.0		
	30	30	249	5122	1.0		
	93.3	15	95	3509	2.1	NMRV075 90B5/B14	90S4
	70	20	122	3862	1.7		
	56	25	148	4160	1.3		
	46.7	30	171	4421	1.3		
	35	40	216	4865	1.0		
	35	80	210	5383	1.1	NMRV090 80B5/B14	8022
	28	100	248	5799	0.8		
	36	25	228	5333	1.6	NMRV090 90B5/B14	90L6
	30	30	263	5667	1.8		
	22.5	40	331	6238	1.2		
	18	50	391	6719	1.0		
	15	60	448	7140	0.8		
	35	40	222	5383	1.6	NMRV090 90B5/B14	90S4
	28	50	266	5799	1.3		
	23.3	60	306	6163	1.0		
	22.5	40	345	7882	2.3	NMRV110 90B5	90L6
	18	50	414	8491	1.8		
	15	60	476	9023	1.4		
	11.3	80	588	9931	1.0		
	28	50	278	7328	2.4	NMRV110 90B5	90S4
	23.3	60	324	7787	1.9		
	17.5	80	402	8571	1.3		
	14	100	473	9232	1.0		
	11.3	80	588	12989	1.5	NMRV130 90B5	90L6
	9	100	689	13500	1.1		
	17.5	80	408	11210	2.1	NMRV130 90B5	90S4
	14	100	480	12076	1.5		

P_{1n} [kW]	n_2 [r/min]	i	M_{2n} [Nm]	F_{r2} [N]	fs		
1.5	373.3	7.5	34	1433	1.5	NMRV075 90B5/B14	90S6
	280	10	45	1577	1.2		
	186.7	15	65	1805	0.9		
	186.7	7.5	68	2359	1.9	NMRV063 90B5/B14	90L4
	140	10	88	2597	1.5		
	93.3	15	126	2973	1.1		
	70	20	164	3272	0.8		
	373.3	7.5	35	1873	2.7	NMRV063 90B5/B14	90S2
	280	10	45	2061	2.2		
	186.7	15	66	2359	1.6	NMRV063 90B5/B14	90S2
	140	20	86	2597	1.2		
	112	25	105	2797	0.9		
	93.3	30	120	2973	1.0		
	120	7.5	103	3227	2.1	NMRV075 100B5/B14	100L6
	90	10	134	3551	1.7		
	60	15	193	4065	1.2		
	56	50	187	4160	1.3	NMRV075 90B5/B14	90S2
	46.7	60	215	4421	1.1		
	140	10	89	3065	2.2	NMRV075 90B5/B14	90L4
	93.3	15	129	3509	1.6		
	70	20	166	3862	1.3		
	56	25	202	4160	1.0		
	46.7	30	233	4421	1.0		
	280	10	45	2433	3.2	NMRV075 90B5/B14	90S2
	186.7	15	66	2785	2.3		
	140	20	86	3065	1.9		
	112	25	105	3302	1.4		
	93.3	30	121	3509	1.4		
	70	40	156	3862	1.1		
	90	10	137	3929	2.7	NMRV090 100B5/B14	100L6
	60	15	198	4498	2.1		
	45	20	258	4951	1.5		
	36	25	310	5333	1.2		
	30	30	358	5667	1.3		
	70	20	170	4273	2.1	NMRV090 90B5/B14	90L4
	56	25	207	4603	1.6		
	46.7	30	239	4891	1.7		
	35	40	303	5383	1.2		
	28	50	363	5799	0.9		
	23.3	60	417	6163	0.8		

P_{1n} [kW]	n_2 [r/min]	i	M_{2n} [Nm]	F_{r2} [N]	fs		
1.5	56	50	197	4603	1.3	NMRV090 90B5/B14	90S2
	46.7	60	227	4891	1.1		
	45	20	264	6256	2.7	NMRV110 100B5/B14	100L6
	36	25	322	6739	2.4		
	30	30	363	7161	2.3		
	22.5	40	471	7882	1.7		
	18	50	565	8491	1.3		
	15	60	649	9023	1.1		
	35	40	315	6803	2.2	NMRV110 90B5	90L4
	28	50	379	7328	1.7		
	23.3	60	442	7787	1.4		
	17.5	80	548	8571	0.9		
	46.7	60	236	6181	2.0	NMRV110 90B5	90S2
	35	80	299	6803	1.3		
	28	100	358	7328	1.0		
	22.5	40	471	10309	2.3	NMRV130 100B5	100L6
	18	50	565	11105	1.9		
	15	60	659	11801	1.4		
	11.3	80	802	12989	1.1		
	17.5	80	557	11210	1.5	NMRV130 90B5	90L4
	14	100	655	12076	1.1		
2.2	373.3	7.5	51	1873	1.8	NMRV063 90B5/B14	90L2
	280	10	66	2061	1.5		
	186.7	15	97	2359	1.1		
	186.7	7.5	99	2785	1.9	NMRV075 100B5/B14	100L1-4
	140	10	131	3065	1.5		
	93.3	15	189	3509	1.1		
	373.3	7.5	50	2210	2.6	NMRV075 90B5/B14	90L2
	280	10	66	2433	2.2		
	186.7	15	97	2785	1.5		
	140	20	126	3065	1.3		
	112	25	154	3302	1.0	NMRV075 100B5/B14	90L2
	93.3	30	178	3509	1.0		
	186.7	7.5	100	3081	2.9	NMRV090 100B5/B14	100L1-4
	140	10	132	3391	2.3		
	93.3	15	191	3882	1.9		
	70	20	249	4273	1.4		
	56	25	304	4603	1.1		
	46.7	30	351	4891	1.2		

P_{1n} [kW]	n_2 [r/min]	i	M_{2n} [Nm]	F_{r2} [N]	fs		
2.2	120	7.5	154	3570	2.2	NMRV090 112B5/B14	112M6
	90	10	201	3929	1.8		
	60	15	291	4498	1.4		
	45	20	378	4951	1.0		
	140	20	129	3391	2.0	NMRV090 90B5/B14	90L2
	112	25	159	3653	1.6		
	93.3	30	185	3882	1.7		
	70	40	237	4273	1.2		
	56	50	289	4603	0.9		
	70	20	255	5399	2.5	NMRV110 100B5	100L1-4
	56	25	311	5816	2.2		
	46.7	30	356	6181	2.0		
	35	40	462	6803	1.5		
	28	50	555	7328	1.2		
	23.3	60	648	7787	1.0		
	90	10	203	4965	3.5	NMRV110 112B5	112M6
	60	15	294	5684	2.6		
	45	20	388	6256	1.9		
	36	25	473	6739	1.6		
	30	30	532	7161	1.6		
	112	25	161	4616	3.1	NMRV110 90B5	90L2
	93.3	30	187	4905	3.0		
	70	40	243	5399	2.2		
	56	50	296	5816	1.7		
	46.7	60	347	6181	1.4		
	35	40	468	8897	2.2	NMRV130 100B5	100L1-4
	28	50	563	9584	1.7		
	23.3	60	657	10185	1.4		
	17.5	80	816	11210	1.0		
	36	25	473	8814	2.2	NMRV130 112B5	112M6
	30	30	539	9366	2.2		
	22.5	40	691	10309	1.6		
	18	50	829	11105	1.3		
	15	60	966	11801	1.0		
	35	80	444	8897	1.3	NMRV130 90B5	90L2
	28	100	525	9584	1.0		
	28	50	570	13103	2.5	NMRV150 100B5	100L1-4
	23.3	60	896	13924	1.4		
	17.5	80	1113	15325	1.0		
	14.0	100	1310	16508	0.8		

P_{1n} [kW]	n_2 [r/min]	i	M_{2n} [Nm]	F_{r2} [N]	fs		
3.0	373.3	7.5	68	2210	1.9	NMRV075 100B5/B14	100L2
	280	10	90	2433	1.6		
	186.7	7.5	135	2785	1.4	NMRV075 100B5/B14	100L2-4
	140	10	178	3065	1.1		
	93.3	15	258	3509	0.8		
	373.3	7.5	70	2446	3.0	NMRV090 100B5/B14	100L2
	280	10	92	2692	2.6		
	186.7	7.5	137	3081	2.1	NMRV090 100B5/B14	100L2-4
	140	10	180	3391	1.7		
	93.3	15	261	3882	1.4		
	70	20	340	4273	1.0		
	56	25	414	4603	0.8		
	46.7	30	479	4891	0.9		
	93.3	15	264	4905	2.5	NMRV110 100B5	100L2-4
	70	20	348	5399	1.9		
	56	25	425	5816	1.6		
	46.7	30	485	6181	1.5		
	35	40	630	6803	1.1		
	28	50	757	7328	0.9		
	120	7.5	210	4511	3.1	NMRV110 100B5	132S6
	90	10	277	4965	2.6		
	60	15	401	5684	1.9		
	45	20	528	6256	1.4		
	56	25	430	7607	2.2	NMRV130 100B5	100L2-4
	46.7	30	491	8084	2.1		
	35	40	638	8897	1.6		
	28	50	767	9584	1.3		
	23.3	60	896	10185	1.0		
	17.5	80	1113	11210	0.8		
	90	10	277	6494	3.5	NMRV130 132B5	132S6
	60	15	406	7434	2.6		
	45	20	528	8182	2.0		
	36	25	645	8814	1.6		
	30	30	735	9366	1.6		
	22.5	40	942	10309	1.2		
	28	50	778	13103	1.8	NMRV150 100B5	100L2-4
	23.3	60	896	13924	1.4		
	17.5	80	1113	15325	1.0		
	14.0	100	1310	16508	0.8		

P_{1n} [kW]	n_2 [r/min]	i	M_{2n} [Nm]	F_{r2} [N]	fs		
4.0	373.3	7.5	91	2210	1.4	NMRV075 112B5/B14	112M2
	280	10	120	2433	1.2		
	186.7	7.5	180	2785	1.0	NMRV075 112B5/B14	112M4
	140	10	237	3065	0.8		
	373.3	7.5	93	2446	2.3	NMRV090 112B5/B14	112M2
	280	10	123	2692	1.9		
	186.7	7.5	182	3081	1.6	NMRV090 112B5	112M4
	140	10	240	3391	1.3		
	93.3	15	348	3882	1.0		
	70	20	453	4273	0.8		
	140	10	240	4285	2.5	NMRV110 112B5	112M4
	93.3	15	352	4905	1.9		
	70	20	464	5399	1.4		
	56	25	566	5816	1.2		
	46.7	30	647	6181	1.1		
	120	7.5	280	4511	2.3	NMRV110 132B5	132M1-6
	90	10	369	4965	1.9		
	60	15	535	5684	1.4		
	56	25	573	7607	1.6	NMRV130 112B5	112M4
	46.7	30	655	8084	1.6		
	35	40	851	8897	1.2		
	28	50	1023	9584	1.0		
	23.3	60	1195	10185	0.8		
	120	7.5	283	5901	3.1	NMRV130 132B5	132M1-6
	90	10	369	6494	2.6		
	60	15	541	7434	2.0		
	45	20	705	8182	1.5		
	36	25	860	8814	1.2		
	28	50	1037	13103	1.4	NMRV150 112B5	112M4
	23.3	60	1195	13924	1.1		
	17.5	80	1484	15325	0.8		
5.5	186.7	7.5	250	3893	2.2	NMRV110 132B5	132S4
	140	10	330	4285	1.8		
	93.3	15	484	4905	1.4		
	70	20	638	5399	1.0		
	140	10	334	5605	2.5	NMRV130 132B5	132S4
	93.3	15	490	6416	1.9		
	70	20	638	7062	1.4		
	56	25	788	7607	1.2		
	46.7	30	900	8084	1.2		
	35	40	1171	8897	0.9		

P_{1n} [kW]	n_2 [r/min]	i	M_{2n} [Nm]	F_{r2} [N]	fs		
5.5	70	20	645	9654	2.0	**NMRV150 132B5**	**132S4**
	56	25	788	10400	1.5		
	46.7	30	934	11051	1.3		
	35.0	40	1171	12163	1.3		
	28.0	50	1426	13103	1.0		
	23.3	60	1643	13924	0.8		
7.5	186.7	7.5	341	3893	1.6	**NMRV110 132B5**	**132M4**
	140	10	450	4285	1.3		
	93.3	15	660	4905	1.0		
	186.7	7.5	345	5092	2.2	**NMRV130 132B5**	**132M4**
	140	10	455	5605	1.8		
	93.3	15	668	6416	1.4		
	70	20	870	7062	1.0		
	56	25	1074	7607	0.9		
	46.7	30	1228	8084	0.8		
	35	40	1596	8897	0.7		
	70	20	880	9654	1.5	**NMRV150 132B5**	**132M4**
	56	25	1074	10400	1.1		
	46.7	30	1274	11051	0.9		
	35	40	1596	12163	1.0		
11	186.7	7.5	512	6962	2.3	**NMRV150 160B5**	**160M4**
	140	10	675	7663	1.8		
	93.3	15	990	8771	1.3		
	70	20	1291	9654	1.0		
	56	25	1576	10400	0.8		
15	186.7	7.5	698	6962	1.7	**NMRV150 160B5**	**160L4**
	140	10	921	7663	1.3		
	93.3	15	1351	8771	0.9		
	70	20	1760	9654	0.7		

DRV 减速机型式 / DRV DECELERATION TYPE

NMRV 减速机本身可以组合成一个双级联体减速机 (DRV)。DRV 的传动比即为第一级 NMRV 和第二级 NMRV 传动比的乘积，可将传动比拓展至 i=300-3200 的范围。

DRV 并不是两个 NMRV 的简单组合，合理的组合应使两个减速机达到一致的工况。因此第二级减速机的机座规格要大于第一级减速机的机座规格。

NMRV reducers can be combined as a double reducers combination(DRV). The ratio of DRV is just the product of the first stage NMRV's ratio. So the ratio can be extended to i=300-3200.

DRV is not only simply combination of two NMRV reducers. the reasonably combinations should make two reducers operating at same condition. therefore the frame size of the second stage reducer should be bigger than the first stage reducer.

DRV 减速机选型表 / GEAR UNIT SELECTION TABLES

DRV 减速机组合表 / DRV Possible geometrical combinations

NMRV+NMRV	i=i1*i2	100	150	200	250	300	400	500	600	750	900
	n2	14	9.3	7	5.6	4.7	3.5	2.8	2.3	1.9	1.6
DRV025/030	0.06kW		10*15	10*20	10*25	10*30	20*20	20*25	20*30	30*25	30*30
	0.09kW	10*10									
DRV025/040	0.06kW					10*30	10*40	20*25	20*30	30*25	30*30
DRV030/040	0.06kW					10*30	10*40	20*25	20*30	25*30	30*30
	0.09kW					10*30					
DRV030/050	0.06kW										30*30
	0.09kW						10*40	10*50	20*30	25*30	30*30
	0.12kW					10*30	10*40	10*50			
	0.18kW					10*30					
DRV030/063	0.06kW										
	0.09kW										15*60
	0.12kW							10*50	15*40	15*50	
	0.18kW					7.5*40	10*40	10*50			
DRV040/075	0.06kW										
	0.09kW										
	0.12kW										30*30
	0.18kW								20*30	25*30	30*30
	0.25kW					10*30	10*40	10*50			
	0.37kW					10*30	10*40				
DRV040/090	0.06kW										
	0.09kW										
	0.12kW										
	0.18kW										15*60
	0.25kW								15*40	15*50	15*60
	0.37kW					7.5*40	10*40	10*50	15*40		
DRV050/110	0.12kW										
	0.18kW										
	0.25kW										
	0.37kW									25*30	30*30
	0.55kW					10*30	10*40	10*50	15*40	25*30	
	0.75kW					10*30	10*40				
DRV063/130	0.25kW										
	0.37kW										
	0.55kW							10*50		25*30	
	0.75kW							10*50	15*40	25*30	30*30
	1.1kW					10*30	10*40	10*50			
	1.5kW					10*30	10*40				
DRV063/150	0.25kW										
	0.37kW										
	0.55kW										
	0.75kW							10*50	15*40	25*30	30*30
	1.1kW		10*15	10*20	10*25	10*30	10*40	10*50	15*40	25*30	
	1.5kW		10*15	10*20	10*25	10*30	10*40	10*50	15*40		

NMRV+NMRV	i=i1*i2	1200	1500	1800	2400	3000	3200	4000	4800	5000
	n2	1.2	0.93	0.78	0.58	0.47	0.44	0.35	0.29	0.28
DRV025/030	0.06kW	40*30	50*30	60*30	60*40	60*50				
	0.09kW									
DRV025/040	0.06kW	40*30	50*30	60*30	60*40	60*50		50*80		50*100
DRV030/040	0.06kW	30*40	50*30	60*30	60*40	60*50	80*40	80*50		50*100
	0.09kW									
DRV030/050	0.06kW	30*40	50*30	60*30	60*40	60*50		80*50	80*60	
	0.09kW									
	0.12kW									
	0.18kW									
DRV030/063	0.06kW		30*50	30*60	60*40	60*50		80*50		50*100
	0.09kW	30*40	30*50							
	0.12kW									
	0.18kW									
DRV040/075	0.06kW				60*40	60*50		80*50		100*50
	0.09kW		50*30	60*30	60*40					
	0.12kW	30*40								
	0.18kW									
	0.25kW									
	0.37kW									
DRV040/090	0.06kW					60*50		80*50		100*50
	0.09kW				60*40	60*50		80*50		
	0.12kW		30*50	30*60	60*40					
	0.18kW	30*40	30*50							
	0.25kW									
	0.37kW									
DRV050/110	0.12kW					60*50		80*50		100*50
	0.18kW			60*30	60*40					
	0.25kW	30*40	50*30	60*30						
	0.37kW	30*40								
	0.55kW									
	0.75kW									
DRV063/130	0.25kW				60*40	60*50		80*50		100*50
	0.37kW	30*40	50*30	60*30						
	0.55kW	30*40								
	0.75kW									
	1.1kW									
	1.5kW									
DRV063/150	0.25kW			60*30	60*40	60*50		80*50		100*50
	0.37kW			60*30	60*40	60*50				
	0.55kW			60*30	60*40					
	0.75kW	30*40								
	1.1kW									
	1.5kW									

蜗轮蜗杆减速机 NMRV MORM GEAR UNITS

DRV 性能参数 / PERFORMANCE PARAMETER

DRV 性能参数 /Performance parameter

P_{1n} [kW]	n_2 [r/min]	i	M_{2n} [Nm]	F_{r2} [N]	fs		
0.06	14.0	100	25	1620	1.3	DRV025/030	5614
	9.3	150	33	1830	0.9		
	7.0	200	41	1830	0.7		
	5.6	250	45	1830	0.8		
	4.7	300	56	3490	1.2	DRV025/040	5614
	3.5	400	69	3490	0.9		
	2.8	500	94	3490	0.7		
	2.3	600	100	3490	0.6		
	1.9	750	115	3490	0.5		
	1.6	900	125	3490	0.5		
	1.2	1200	153	3490	0.4		
	0.9	1500	185	3490	0.3		
	0.8	1800	198	3490	0.3		
	0.6	2400	247	3490	0.2		
	0.5	3000	280	3490	0.2		
	0.4	4000	295	3490	0.1		
	0.3	5000	348	3490	0.1		
	4.7	300	55	3490	1.3	DRV030/040	5614
	3.5	400	67	3490	0.9		
	2.8	500	88	3490	0.6		
	2.3	600	95	3490	0.7		
	1.9	750	103	3490	0.6		
	1.6	900	118	3490	0.5		
	1.2	1200	143	3490	0.4		
	0.9	1500	166	3490	0.4		
	0.8	1800	184	3490	0.3		
	0.6	2400	217	3490	0.2		
	0.4	3200	247	3490	0.2		
	0.4	4000	278	3490	0.1		
	0.3	5000	327	3490	0.1		
	1.6	900	118	4840	1.0	DRV030/050	5614
	1.2	1200	143	4840	0.7		
	0.9	1500	166	4840	0.7		
	0.8	1800	184	4840	0.7		
	0.6	2400	227	4840	0.5		
	0.5	3000	256	4840	0.4		
	0.4	4000	278	4840	0.3		
	0.3	4800	316	4840	0.3		

P_{1n} [kW]	n_2 [r/min]	i	M_{2n} [Nm]	F_{r2} [N]	fs		
0.06	0.9	1500	173	6270	1.1	DRV030/063	5614
	0.8	1800	191	6270	0.9		
	0.6	2400	227	6270	0.8		
	0.5	3000	256	6270	0.7		
	0.4	4000	295	6270	0.6		
	0.3	5000	327	6270	0.4		
	0.6	2400	267	7380	1.1	DRV040/075	5614
	0.5	3000	305	7380	0.8		
	0.4	4000	360	7380	0.7		
	0.3	5000	409	7380	0.5		
	0.5	3000	329	8180	1.4	DRV040/090	5614
	0.4	4000	393	8180	1.3		
	0.3	5000	430	8180	1.0		
0.09	28.0	100	18	1286	1.6	DRV025/030	5612
	18.7	150	25	1472	1.1		
	14.0	200	31	1620	0.9		
	14.0	100	37	1620	0.8	DRV025/030	5624
	9.3	150	50	1830	0.6		
	7.0	200	61	1830	0.5		
	5.6	250	68	1830	0.5		
	4.7	300	77	1830	0.4		
	3.5	400	106	1830	0.3		
	2.8	500	117	1830	0.3		
	2.3	600	135	1830	0.2		
	1.9	750	149	1830	0.2		
	1.6	900	167	1830	0.2		
	1.2	1200	201	1830	0.1		
	0.9	1500	231	1830	0.1		
	0.8	1800	264	1830	0.1		
	0.6	2400	311	1830	0.1		
	0.5	3000	347	1830	0.1		
	9.3	300	43	3490	1.6	DRV025/040	5612
	7.0	400	52	3490	1.2		
	5.6	500	71	3490	0.8		
	4.7	300	82	3490	0.8	DRV030/040	5624
	3.5	400	103	4840	1.2	DRV030/050	5624
	2.8	500	120	4840	1.0		
	2.3	600	146	4840	0.9		
	1.9	750	158	4840	0.8		

蜗轮蜗杆减速机 NMRV MORM GEAR UNITS

P_{1n} [kW]	n_2 [r/min]	i	M_{2n} [Nm]	F_{r2} [N]	fs		
0.09	1.6	900	177	4840	0.7	**DRV030/050**	**5624**
	1.6	900	188	6270	1.0	**DRV030/063**	**5624**
	1.2	1200	222	6270	0.9		
	0.9	1500	259	6270	0.7		
	0.9	1500	305	7380	1.1	**DRV040/075**	**5624**
	0.8	1800	331	7380	1.0		
	0.6	2400	400	7380	0.7		
	0.5	3000	494	8180	0.9	**DRV040/090**	**5624**
	0.4	4000	589	8180	0.8		
0.12	4.7	300	112	4840	1.2	**DRV030/050**	**6314**
	3.5	400	138	4840	0.9		
	2.8	500	160	4840	0.7		
	2.8	500	168	6270	1.3	**DRV030/063**	**6314**
	2.3	600	199	6270	1.1		
	1.9	750	217	6270	0.9		
	1.6	900	279	7380	1.2	**DRV040/075**	**6314**
	1.2	1200	344	7380	0.9		
	0.8	1800	470	8180	0.9	**DRV040/090**	**6314**
	0.6	2400	593	8180	0.9		
	0.5	3000	731	10320	1.2	**DRV050/110**	**6314**
	0.4	4000	884	10320	1.0		
	0.3	5000	1023	10320	0.8		
0.18	3.5	400	216	6270	1.0	**DRV030/063**	**6324**
	2.8	500	252	6270	0.8		
	2.3	600	336	7380	1.1	**DRV040/075**	**6324**
	1.9	750	371	7380	0.9		
	1.6	900	419	7380	0.8		
	1.2	1200	544	8180	1.0	**DRV040/090**	**6324**
	0.9	1500	647	8180	0.8		
	0.8	1800	727	10320	1.5	**DRV050/110**	**6324**
	0.6	2400	948	10320	1.1		
0.25	7.0	400	150	6270	1.4	**DRV030/063**	**6322**
	5.6	500	175	6270	1.2		
	3.5	400	321	7380	1.1	**DRV040/075**	**7114**
	2.8	500	375	7380	0.8		
	2.3	600	488	8180	1.2	**DRV040/090**	**7114**
	1.9	750	553	8180	0.9		
	1.6	900	612	8180	0.8		
	1.2	1200	776	10320	1.3	**DRV050/110**	**7114**

P_{1n} [kW]	n_2 [r/min]	i	M_{2n} [Nm]	F_{r2} [N]	fs		
0.25	0.9	1500	924	10320	1.2	**DRV050/110**	**7114**
	0.8	1800	1010	10320	1.1		
	0.6	2400	1358	13500	1.0	**DRV063/130**	**7114**
	0.5	3000	1626	13500	0.8		
	0.4	4000	1910	13500	0.6		
	0.3	5000	2132	13500	0.5		
	0.8	1800	1199	18000	1.8	**DRV063/150**	**7114**
	0.6	2400	1446	18000	1.8		
	0.5	3000	1713	18000	1.4		
	0.4	4000	2026	18000	0.9		
	0.3	5000	2251	18000	0.7		
0.37	9.3	300	182	6270	1.3	**DRV030/063**	**7112**
	7.0	400	222	6270	1.0		
	4.7	300	383	7380	1.0	**DRV040/075**	**7124**
	3.5	400	474	7380	0.7		
	4.7	300	406	8180	1.5	**DRV040/090**	**7124**
	3.5	400	505	8180	1.2		
	2.8	500	593	8180	0.9		
	2.3	600	722	8180	0.8		
	1.9	750	837	10320	1.3	**DRV050/110**	**7124**
	1.6	900	928	10320	1.2		
	1.2	1200	1148	10320	0.8		
	0.9	1500	1444	13500	1.1	**DRV063/130**	**7124**
	0.8	1800	1586	13500	0.9		
	0.8	1800	1775	18000	1.2	**DRV063/150**	**7124**
	0.6	2400	2141	18000	1.2		
	0.5	3000	2535	18000	0.9		
0.55	9.3	300	305	8180	2.0	**DRV040/090**	**7122**
	7.0	400	375	8180	1.5		
	5.6	500	441	8180	1.2		
	4.7	300	615	10320	2.0	**DRV050/110**	**8014**
	3.5	400	810	10320	1.4		
	2.8	500	938	10320	1.1		
	2.3	600	1096	10320	1.0		
	1.9	750	1244	10320	0.9		
	2.8	500	957	13500	1.6	**DRV063/130**	**8014**
	1.9	750	1382	13500	1.2		
	1.2	1200	2057	13500	0.8		
	0.8	1800	2638	18000	0.8	**DRV063/150**	**8014**
	0.6	2400	3182	18000	0.6		

P_{1n} [kW]	n_2 [r/min]	i	M_{2n} [Nm]	F_{r2} [N]	fs		
0.75	9.3	300	424	10320	2.8	DRV050/110	8012
	7.0	400	553	10320	2.1		
	5.6	500	640	10320	1.6		
	4.7	300	838	10320	1.5	DRV050/110	8024
	3.5	400	1105	10320	1.1		
	2.8	500	1305	13500	1.1	DRV063/130	8024
	2.3	600	1557	13500	1.0		
	1.9	750	1772	13500	0.9		
	1.6	900	2014	13500	0.8		
	2.8	500	1291	18000	1.8	DRV063/150	8024
	2.3	600	1529	18000	1.7		
	1.9	750	1783	18000	1.3		
	1.6	900	2215	18000	0.9		
	1.2	1200	2680	18000	1		
1.1	9.3	300	621	10320	1.9	DRV050/110	8022
	7.0	400	810	10320	1.4		
	5.6	500	938	10320	1.1		
	4.7	300	1274	13500	1.3	DRV063/130	90S4
	3.5	400	1621	13500	1.0		
	2.8	500	1913	13500	0.8		
	9.3	150	753	18000	3.1	DRV063/150	90S4
	7	200	966	18000	2.4		
	5.6	250	1175	18000	1.7		
	4.7	300	1364	18000	1.7		
	3.5	400	1619	18000	1.6		
	2.8	500	1893	18000	1.2		
	2.3	600	2242	18000	1.2		
	1.9	750	2616	18000	0.9		
1.5	9.3	300	878	13500	1.9	DRV063/130	90S2
	7.0	400	1105	13500	1.4		
	5.6	500	1305	13500	1.1		
	4.7	300	1737	13500	1.0	DRV063/130	90L4
	3.5	400	2210	13500	0.7		
	9.3	150	1026	18000	2.3	DRV063/150	90L4
	7	200	1317	18000	1.8		
	5.6	250	1602	18000	1.3		
	4.7	300	1860	18000	1.3		
	3.5	400	2208	18000	1.2		
	2.8	500	2582	18000	0.9		
	2.3	600	3057	18000	0.9		

NRV 外形尺寸图表 / OUTLINE DIMENSION SHEET

NMRV025 外形尺寸 / Outline Dimension

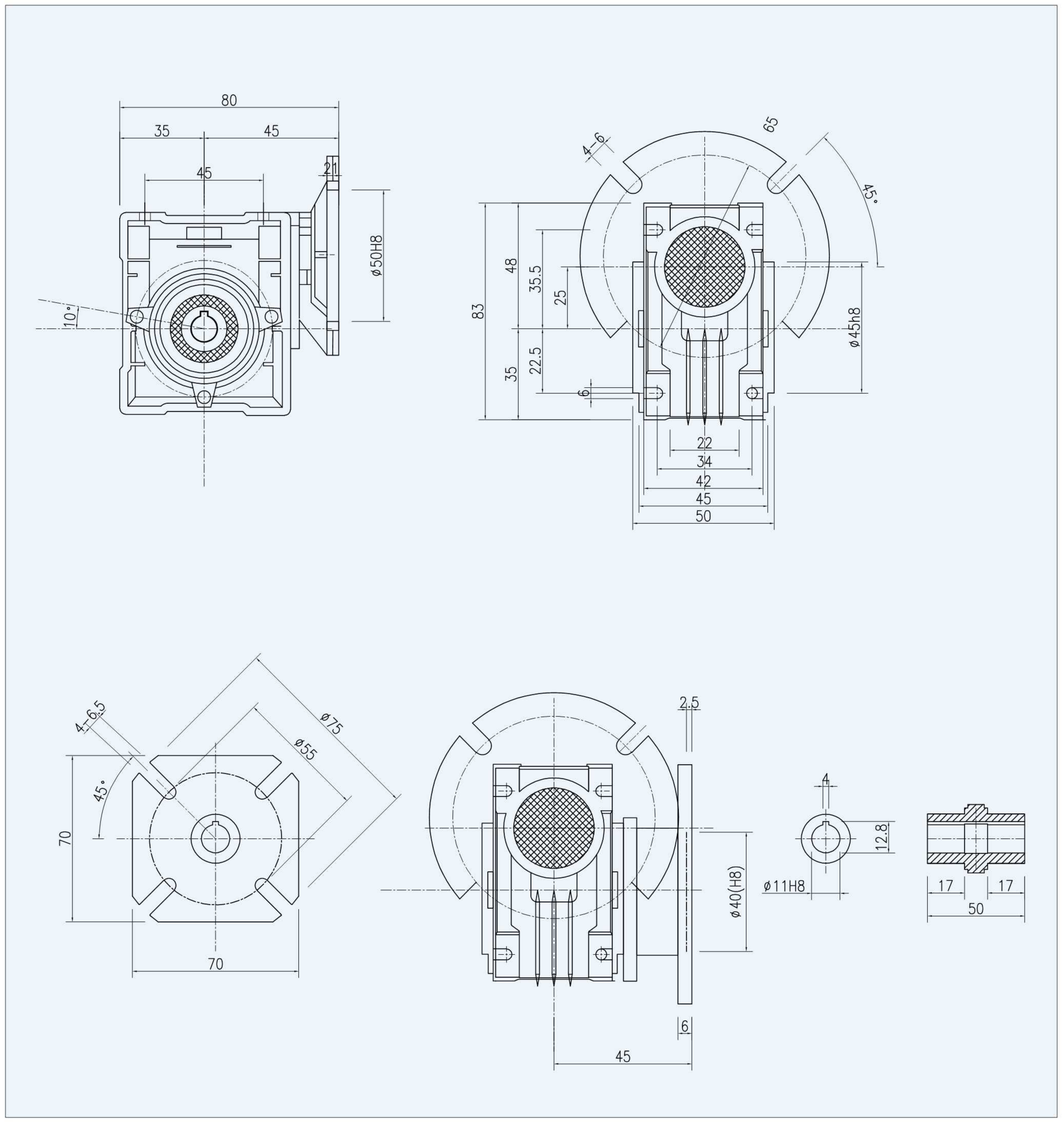

NMRV 外形尺寸 / NMRV Outline Dimension

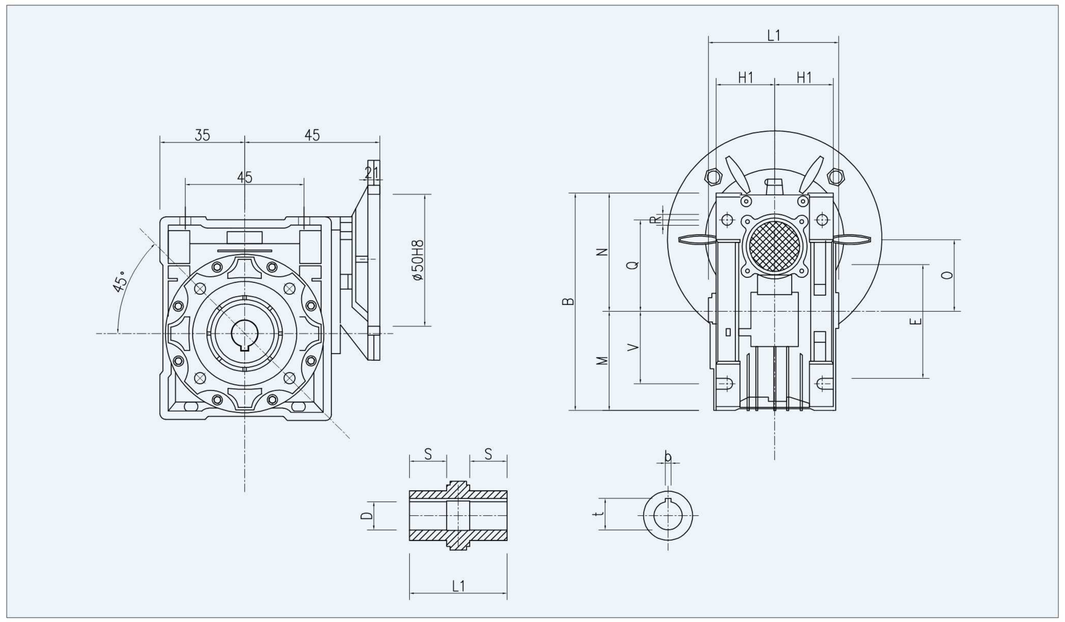

NMRV	A	B	C	C1	D(H7)	E(h7)	F	G	H	H1	I	L1	M	N	O
030	80	97	54	44	14	55	32	56	65	29	55	63	40	57	30
040	100	121.5	70	60	18(19)	60	43	71	75	36.5	70	78	50	71.5	40
050	120	144	80	70	25(24)	70	49	85	85	43.5	80	92	60	84	50
063	144	174	100	85	25(28)	80	67	103	95	53	95	112	72	102	63
075	172	205	120	90	28(35)	95	72	112	115	57	112.5	120	86	119	75
090	206	238	140	100	35(38)	110	74	130	130	67	129.5	140	103	135	90
110	255	295	170	115	42	130	—	144	165	74	160	155	127.5	167.5	110
130	293	335	200	120	45	180	—	155	215	81	179	170	146.5	187.5	130
150	340	400	240	145	50	180	—	185	215	96	210	200	170	230	150

NMRV	P	Q	R	S	T	V	PE	b	t	α	Kg
030	75	44	6.5	21	5.5	27	M6×11(n=4)	5	16.3	0°	1.2
040	87	55	6.5	26	6.5	35	M6×8(n=4)	6	20.8(21.8)	45°	2.3
050	100	64	8.5	30	7	40	M8×10(n=4)	8	28.3(27.3)	45°	3.8
063	110	80	8.5	36	8	50	M8×14(n=8)	8	28.3(31.3)	45°	6.2
075	140	93	11	40	10	60	M8×14(n=8)	8(10)	31.3(38.3)	45°	9
090	160	102	13	45	11	70	M10×18(n=8)	10	38.3(41.3)	45°	13
110	200	125	14	50	14	85	M10×18(n=8)	12	45.3	45°	42.5
130	250	140	16	60	15	100	M12×21(n=8)	14	48.8	45°	59
150	250	180	18	72.5	18	120	M12×21(n=8)	14	53.8	45°	87

注：重量 (Kg) 不包含电机的重量。

NOTE: Weight(Kg)without the weight of motor.

NRV 外形尺寸 / NRV Outline Dimension

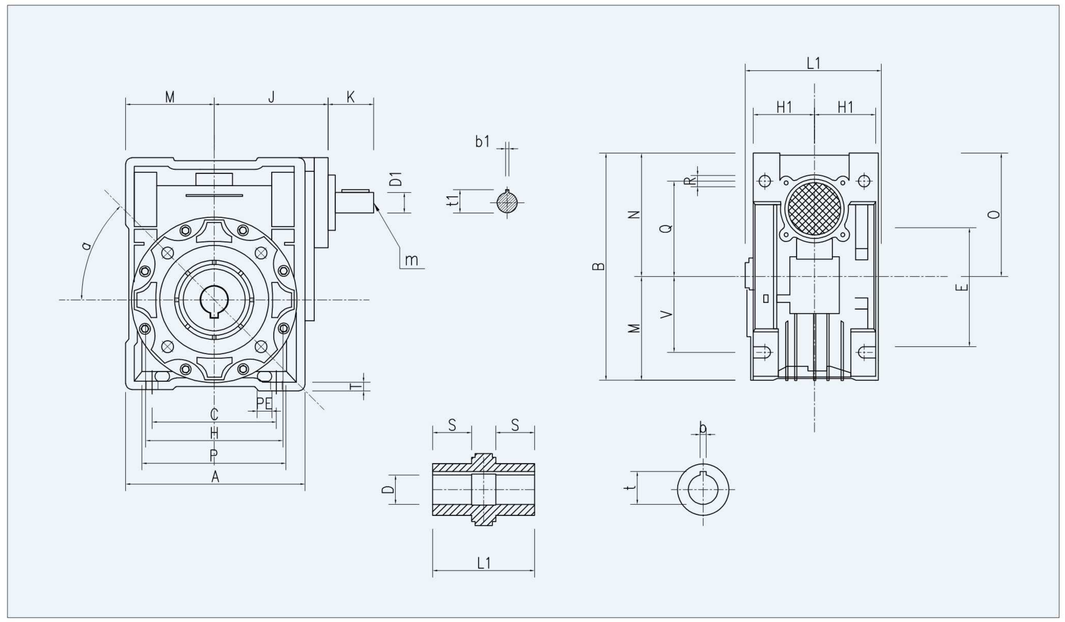

NRV	A	B	C	C1	D(H7)	D1(j6)	E(H8)	F	G	H	H1	J	K	L1	M	N	O
030	80	97	54	44	14	9	55	32	56	65	29	51	20	63	40	57	30
040	100	121.5	70	60	18(19)	11	60	43	71	75	36.5	60	23	78	50	71.5	40
050	120	144	80	70	25(24)	14	70	49	85	85	43.5	74	30	92	60	84	50
063	144	174	100	85	25(28)	19	80	67	103	95	53	90	40	112	72	102	63
075	172	205	120	90	28(35)	24	95	72	112	115	57	105	50	120	86	119	75
090	206	238	140	100	35(38)	24	110	74	130	130	67	125	50	140	103	135	90
110	255	295	170	115	42	28	130	—	144	165	74	142	60	155	127.5	167.5	110
130	293	335	200	120	45	30	180	—	155	215	81	162	80	170	146.5	187.5	130
150	340	400	240	145	50	35	180	—	185	215	96	195	80	200	170	230	150

NRV	P	Q	R	S	T	V	PE	b	b1	t	t1	m	α	Kg
030	75	44	6.5	21	5.5	27	M6×11(n=4)	5	3	16.3	10.2	—	0°	1.2
040	87	55	6.5	26	6.5	35	M6×8(n=4)	6	4	20.8(21.8)	12.5	—	45°	2.3
050	100	64	8.5	30	7	40	M8×10(n=4)	8	5	28.3(27.3)	16.0	M6	45°	3.8
063	110	80	8.5	36	8	50	M8×14(n=8)	8	6	28.3(31.3)	21.5	M6	45°	6.2
075	140	93	11	40	10	60	M8×14(n=8)	8(10)	8	31.3(38.3)	27.0	M8	45°	9
090	160	102	13	45	11	70	M10×18(n=8)	10	8	38.3(41.3)	27.0	M8	45°	13
110	200	125	14	50	14	85	M10×18(n=8)	12	8	45.3	31.0	M10	45°	42.5
130	250	140	16	60	15	100	M12×21(n=8)	14	8	48.8	33.0	M10	45°	59
150	250	180	18	72.5	18	120	M12×21(n=8)	14	10	53.8	38	M12	45°	87

注：重量 (Kg) 不包含电机的重量。

NOTE: Weight(Kg)without the weight of motor.

NRV 外形尺寸 / NRV Outline Dimension

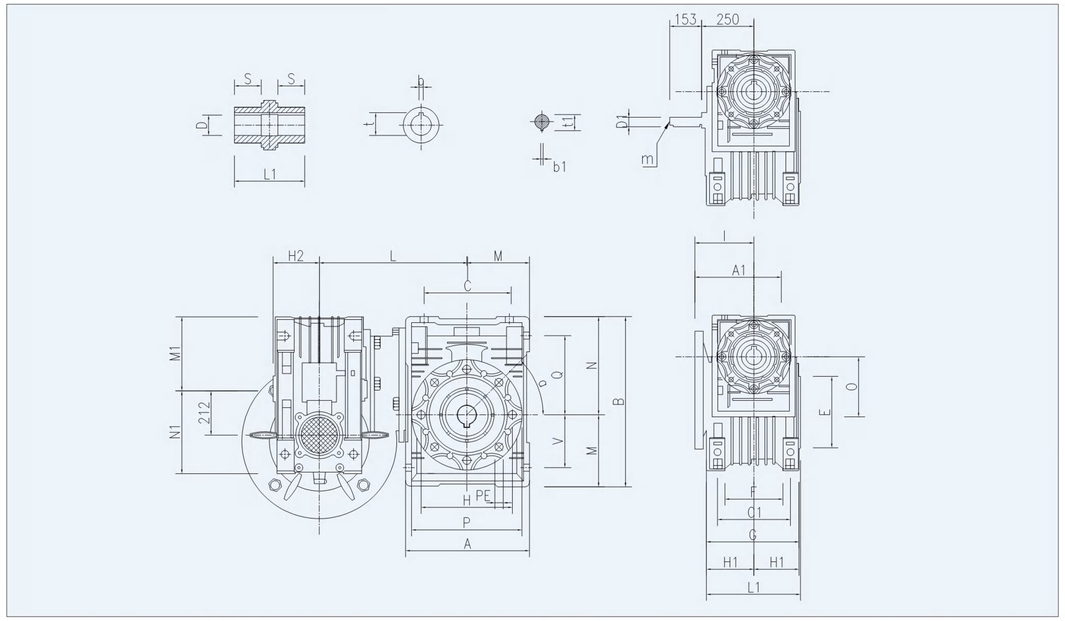

NRV	A	B	C	C1	D(H7)	D1(j6)	E(H8)	F	G	H	H1	J	K	L1	M	N	O
030	80	97	54	44	14	9	55	32	56	65	29	51	20	63	40	57	30
040	100	121.5	70	60	18(19)	11	60	43	71	75	36.5	60	23	78	50	71.5	40
050	120	144	80	70	25(24)	14	70	49	85	85	43.5	74	30	92	60	84	50
063	144	174	100	85	25(28)	19	80	67	103	95	53	90	40	112	72	102	63
075	172	205	120	90	28(35)	24	95	72	112	115	57	105	50	120	86	119	75
090	206	238	140	100	35(38)	24	110	74	130	130	67	125	50	140	103	135	90
110	255	295	170	115	42	28	130	—	144	165	74	142	60	155	127.5	167.5	110
130	293	335	200	120	45	30	180	—	155	215	81	162	80	170	146.5	187.5	130
150	340	400	240	145	50	35	180	—	185	215	96	195	80	200	170	230	150

DRV	N	N1	O	O1	P	Q	R	S	V	PE	α	b	b1	t	t1	m	Kg
025/030	57	48	30	25	75	44	6.5	21	27	M6×10(n=4)	0°	5	—	16.3	—	—	32.5
025/040	71.5	48	40	25	87	55	6.5	26	35	M6×10(n=4)	45°	6	—	20.8(21.8)	—	—	43
030/040	71.5	57	40	30	87	55	6.5	26	35	M6×10(n=4)	45°	6(6)	3	20.8(21.8)	10.2	—	43
030/050	84	57	50	30	100	64	8.5	30	40	M8×10(n=4)	45°	8(8)	3	28.3(27.3)	10.2	—	53.5
030/063	102	57	63	30	110	80	8.5	36	50	M8×14(n=8)	45°	8(8)	3	28.3(31.3)	10.2	—	53.5
040/075	119	71.5	75	40	140	93	11	40	60	M8×14(n=8)	45°	8(10)	4	31.3(38.3)	12.5	—	63.5
040/090	135	71.5	90	40	160	102	13	45	70	M10×18(n=8)	45°	10	4	38.3(41.3)	12.5	—	84.5
050/110	167.5	84	110	50	200	125	14	50	85	M10×18(n=8)	45°	12	5	45.3	16	—	84.5
063/130	187.5	102	130	63	250	140	16	60	100	M12×21(n=8)	45°	14	6	48.8	21.5	M6	85
063/150	230	102	150	63	250	180	18	72.5	120	M12×21(n=8)	45°	14	6	53.8	21.5	M6	87

注：重量 (Kg) 不包含电机的重量。

NOTE: Weight(Kg)without the weight of motor.

NMRV 连接尺寸图表 / CONNECTING DIMENSION SHEET

NMRV 输出法兰尺寸图 / NMRV Output Flange Dimension

..FA

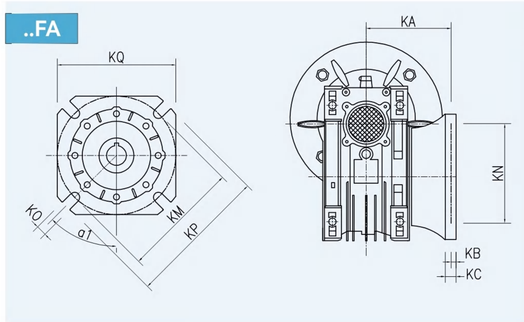

..FB

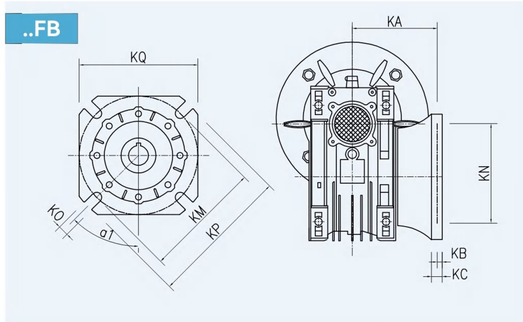

..FC ..FD

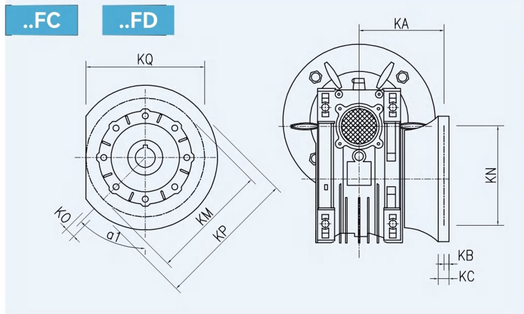

..FE

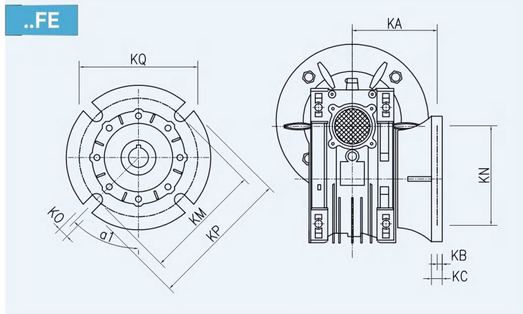

NMRV	FA								
	a1	KA	KB	KC	KM	KNH8	KO	KP	KQ
030	45°	54.5	6	4	68	50	6.5(n=4)	80	70
040	45°	67	7	4	75	60	9(n=4)	110	95
050	45°	90	9	5	85	70	11(n=4)	125	110
063	45°	82	10	6	150	115	11(n=4)	180	142
075	45°	111	13	6	165	130	14(n=4)	200	170
090	45°	111	13	6	175	152	14(n=4)	210	200
110	45°	139	15	6	230	170	14(n=8)	280	260
130	45°	140	15	6	255	180	16(n=8)	320	290
150	22.5°	155	15	6	255	180	16(n=8)	320	290

NMRV	FB								
	a1	KA	KB	KC	KM	KNH8	KO	KP	KQ
030	—	—	—	—	—	—	—	—	—
040	45°	97	7	4	75	60	9(n=4)	110	95
050	45°	120	9	5	85	70	11(n=4)	125	110
063	45°	112	10	6	150	115	11(n=4)	180	142
075	45°	90	13	6	130	110	11(n=4)	160	—
090	45°	122	18	6	215	180	14(n=4)	250	—
110	—	—	—	—	—	—	—	—	—
130	—	—	—	—	—	—	—	—	—
150	—	—	—	—	—	—	—	—	—

NMRV	FC								
	a1	KA	KB	KC	KM	KNH8	KO	KP	KQ
040	45°	80	9	5	115	95	9.5(n=4)	140	—
050	45°	89	10	5	130	110	9.5(n=4)	160	—
063	45°	98	10	5	165	130	11(n=4)	200	—
090	45°	110	17	6	165	130	11(n=4)	200	—

NMRV	FD								
	a1	KA	KB	KC	KM	KNH8	KO	KP	KQ
040	45°	58	• 12	5	100	80	9(n=4)	120	—
050	45°	72	14.5	5	115	95	11(n=4)	140	—
063	45°	107	10	5	165	130	11(n=4)	200	—
090	45°	151	13	6	175	152	14(n=4)	210	—

NMRV	FE								
	a1	KA	KB	KC	KM	KNH8	KO	KP	KQ
040	—	—	—	—	—	—	—	—	—
050	—	—	—	—	—	—	—	—	—
063	45°	80.5	16.5	5	130	110	11(n=4)	160	—
090	—	—	—	—	—	—	—	—	—

BKM.. IEC 输入法兰尺寸 / Input Flage Dimension

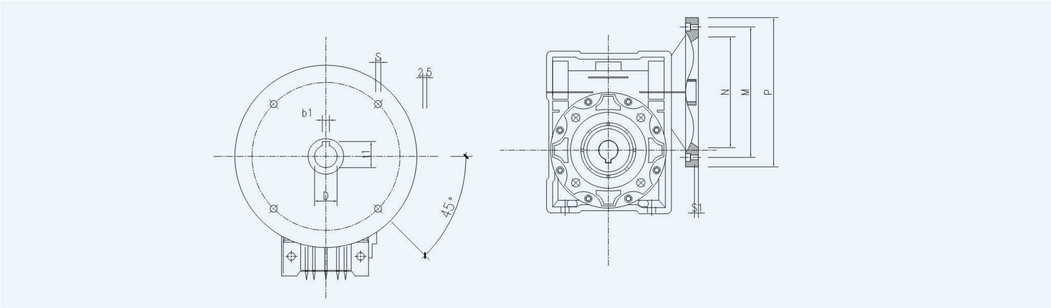

NMRV	PAM-IEC	N		M		P		S		b1	t1	s1	i（速比 /ratio)											
													5	7.5	10	15	20	25	30	40	50	60	80	100
		B5	B14	B5	B14	B5	B14	B5	B14				D											
025	56B14	—	50	—	65	—	80	—	6	3	10.4	4	9	9	9	9	9	9	9	9	9	9	—	—
030	56B5/B14	80	50	100	65	120	80	6.5	5.5	3	10.4	4	9	9	9	9	9	9	9	9	9	9	9	—
	63B5/B14	95	60	115	75	180	90	9	5.5	4	12.8	4	11	11	11	11	11	11	11	11	11	—	—	—
040	56B5/B14	80	50	100	65	120	80	6.5	5.5	3	10.4	4	—	—	—	—	—	—	—	—	9	9	9	9
	63B5/B14	95	60	115	75	140	90	9	5.5	4	12.8	4	11	11	11	11	11	11	11	11	11	11	11	11
	71B5/B14	110	70	130	85	160	105	9	7	5	16.3	5	14	14	14	14	14	14	14	14	—	—	—	—
050	63B5/B14	95	60	115	75	140	90	9	5.5	4	12.8	5	—	—	—	—	—	—	—	11	11	11	11	11
	71B5/B14	110	70	130	85	160	105	9	7	5	16.3	5	14	14	14	14	14	14	14	14	14	14	14	—
	80B5/B14	130	80	165	100	200	120	11	7	6	21.8	5	19	19	19	19	19	19	19	19	—	—	—	—
063	71B5/B14	110	70	130	85	160	105	9	7	5	16.3	5	—	—	—	—	—	—	—	14	14	14	14	14
	80B5/B14	130	80	165	100	200	120	11	7	6	21.8	5	—	19	19	19	19	19	19	19	19	19	19	19
	90B5/B14	130	95	165	115	200	140	11	9	8	27.3	5	—	24	24	24	24	24	24	—	—	—	—	—
075	71B5	110	—	130	—	160	—	9	7	5	16.3	5	—	—	—	—	—	—	—	—	14	14	14	14
	80B5/B14	130	80	165	100	200	120	11	7	6	21.8	5	—	—	—	—	—	—	—	19	19	19	19	19
	90B5/B14	130	95	165	115	200	140	11	9	8	27.3	5	—	24	24	24	24	24	24	24	—	—	—	—
	100B5/B14	180	110	215	130	250	160	13	9	8	31.3	5.5	—	28	28	28	—	—	—	—	—	—	—	—
	112B5/B14	180	110	215	130	250	160	13	9	8	31.3	5.5	—	28	—	—	—	—	—	—	—	—	—	—
090	80B5/B14	130	80	165	100	200	120	11	7	6	21.8	5	—	—	—	—	—	—	—	—	19	19	19	19
	90B5/B14	130	95	165	115	200	140	11	9	8	27.3	5	—	—	—	—	—	24	24	24	24	24	—	—
	100B5/B14	140	110	215	130	250	160	13	9	8	31.3	5.5	—	28	28	28	28	28	28	—	—	—	—	—
	112B5/B14	180	110	215	130	250	160	13	9	8	31.3	5.5	—	28	28	28	28	—	—	—	—	—	—	—
110	80B5	130	—	165	—	200	—	11	7	6	21.8	6	—	—	—	—	—	—	—	—	—	—	19	19
	90B5	130	—	165	—	200	—	11	9	8	27.3	6	—	—	—	—	—	—	24	24	24	24	24	24
	100B5	180	—	215	—	250	—	13	9	8	27.3	6	—	28	28	28	28	28	28	28	28	28	—	—
	112B5	180	—	215	—	250	—	13	9	8	31.3	6	—	28	28	28	28	28	28	—	—	—	—	—
	132B5	230	—	265	—	300	—	13	—	10	41.3	6	—	38	38	38	38	—	—	—	—	—	—	—
130	90B5	130	—	165	—	200	—	11	9	8	27.3	6	—	—	—	—	—	—	—	—	—	—	24	24
	100B5	180	—	215	—	250	—	13	9	8	31.3	6	—	—	—	—	—	—	—	28	28	28	28	28
	112B5	180	—	215	—	250	—	13	9	8	31.3	6	—	28	28	28	28	28	28	28	28	28	—	—
	132B5	230	—	265	—	300	—	13	—	10	41.3	6	—	38	38	38	38	38	38	38	—	—	—	—
150	100/112B5	180	—	215	—	250	—	13	9	8	31.3	6	—	—	—	—	—	—	—	—	28	28	28	28
	132B5	230	—	265	—	300	—	13	—	10	41.3	6	—	—	—	—	38	38	38	38	38	38	—	—
	160B5	250	—	300	—	350	—	19	—	12	45.3	6	—	42	42	42	42	42	—	—	—	—	—	—

NMRV.. NEMA 输入法兰尺寸 / Input Flange Dimension

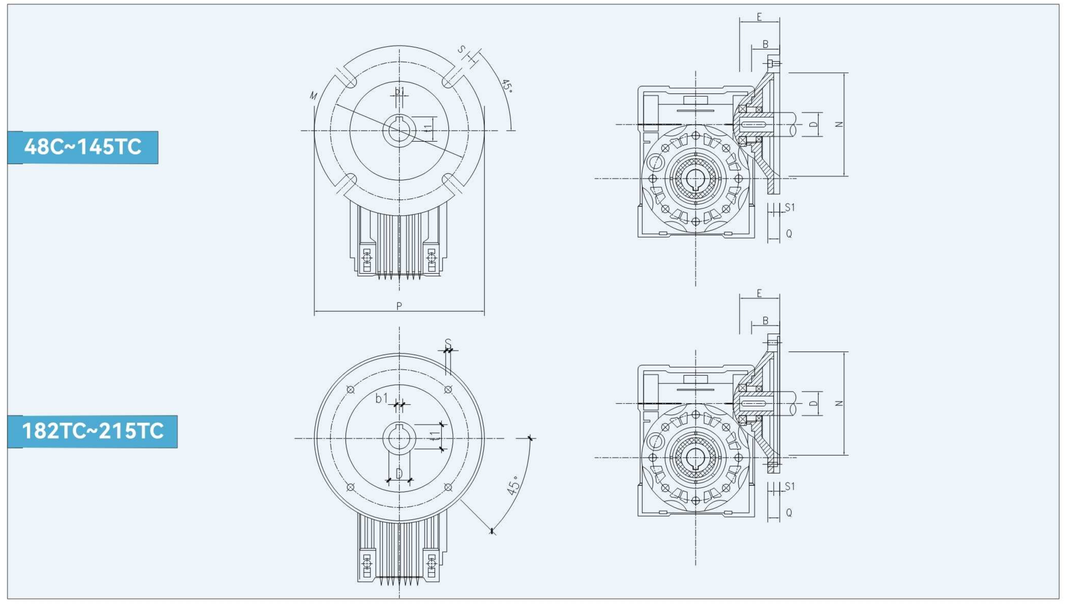

NMRV	NEMA Flange	B	D	E	b1	t1	M	N	P	Q	S	S1
030	48C	1.03	0.500	1.66	0.130	0.560	3.750	3.0	5.7	0.433	0.320	0.177
040	56C	1.15	0.625	2.06	0.188	0.713	5.875	4.5	6.5	0.433	0.413	0.177
050	56C	1.15	0.625	2.06	0.188	0.713	5.875	4.5	6.5	0.433	0.413	0.177
063	56C	1.22	0.625	2.06	0.188	0.713	5.875	4.5	6.5	0.433	0.413	0.177
	140TC	1.22	0.875	2.12	0.188	0.963	5.875	4.5	6.5	0.433	0.413	0.177
	145TC											
075 090	56C	1.50	0.625	2.06	0.188	0.713	5.875	4.5	6.5	0.433	0.413	0.177
	143TC	1.50	0.875	2.12	0.188	0.963	5.875	4.5	6.5	0.433	0.413	0.177
	145TC											
	182TC	1.50	1.125	2.62	0.250	1.240	7.250	8.5	9.0	0.472	0.551	0.197
	184TC											
110 130	56C	1.89	0.625	2.06	0.188	0.713	5.875	4.5	6.5	0.433	0.413	0.177
	143TC	1.89	0.875	2.12	0.188	0.963	5.875	4.5	6.5	0.433	0.413	0.177
	145TC											
	182TC	1.89	1.125	2.62	0.250	1.240	7.250	8.5	9.0	0.472	0.551	0.197
	184TC											
	213TC	1.89	1.375	3.12	0.312	1.517	7.250	8.5	9.0	0.472	0.551	0.197
	215TC											
150	182TC	1.33	1.125	2.62	0.250	1.240	7.250	8.5	9.0	0.472	0.551	0.197
	184TC											
	213TC	1.33	1.375	3.12	0.312	1.517	7.250	8.5	9.0	0.472	0.551	0.197
	215TC											

NMRV.. ST 伺服电机输入法兰尺寸 / Servo Motor Input Flange Dimension

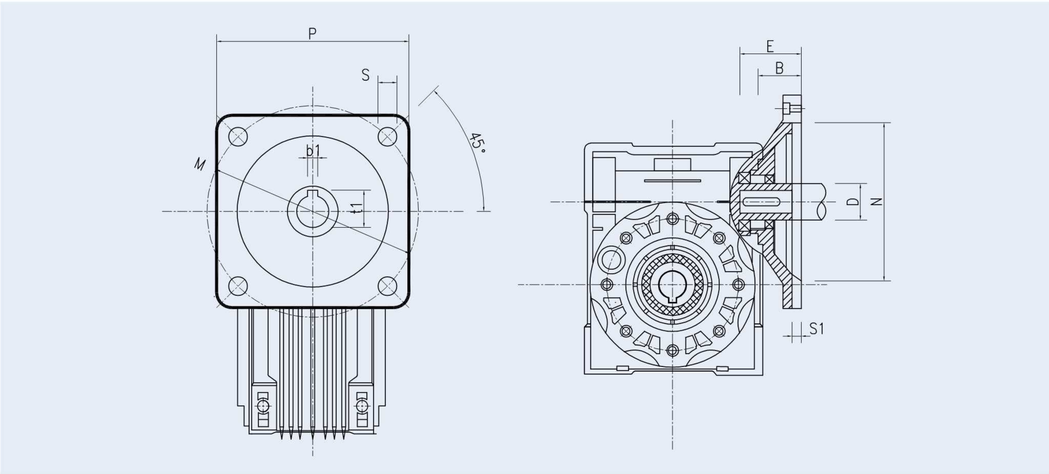

NMRV	P	B	D_{h7}	E	b1	t1	M	N	S	S1
040	60	35	14	30	5	16.3	70	50	5.5	4
050	60	35	14	30	5	16.3	70	50	5.5	4
	80	28	19	35	6	21.8	90	70	6	5
	90	30	16	35	5	18.3	100	80	6.5	5
	110	26	19	55	6	21.8	130	95	9	6
	130	32	22	57	6	24.8	145	110	9	6
063	60	40	14	30	5	16.3	70	50	5.5	4
	80	21	19	35	6	21.8	90	70	6	5
	90	21	16	35	5	18.3	100	80	6.5	5
	110	46	19	55	6	21.8	130	95	9	6
	130	40	22	57	6	24.8	145	110	9	6
075	110	47	19	55	6	21.8	130	95	9	6
	130	40	22	57	6	24.8	145	110	9	6
	150	38	28	58	8	31.3	165	130	11	6
090	110	47	19	55	6	21.8	130	95	9	6
	130	40	22	57	6	24.8	145	110	9	6
	150	38	28	58	8	31.3	165	130	11	6
110	130	38	22	57	6	24.8	145	110	9	6
	150	38	28	58	8	31.3	165	130	11	6
	180	38	35	65	10	38.3	200	114.3	13.5	6
130	130	38	22	57	6	24.8	145	110	9	6
	150	38	28	58	8	31.3	165	130	11	6
	180	38	35	65	10	38.3	200	114.3	13.5	6
150	130	38	22	57	6	24.8	145	110	9	6
	150	38	28	58	8	31.3	165	130	11	6
	180	38	35	65	10	38.3	200	114.3	13.5	6

附件尺寸图表 / ACCESSORIES OUTLINE DIMENSION SHEET

输出轴 / Output Shafts

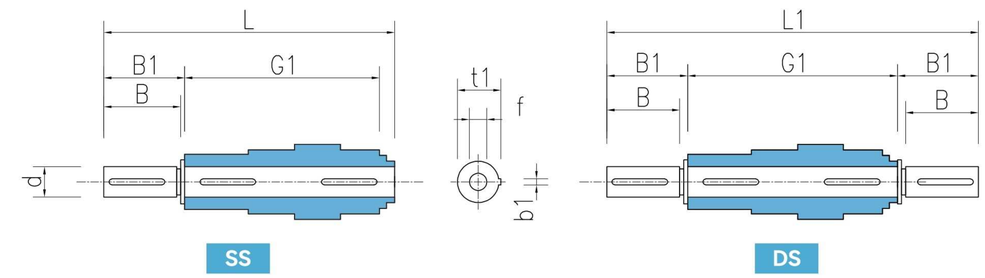

NMRV	dh6	B	B1	G1	L	L1	f	b1	t1
025	11	23	25.5	50	81	101	—	4	12.5
030	14	30	32.5	63	102	128	M6*17	5	16
040	18	40	43	78	128	164	M6*17	6	20.5
050	25	50	53.5	92	153	199	M10*27	8	28
063	25	50	53.5	112	173	219	M10*27	8	28
075	28	60	63.5	120	192	247	M10*27	8	31
090	35	80	84.5	140	234	309	M12*34	10	38
110	42	80	84.5	155	249	324	M16*42	12	45
130	45	80	85	170	265	340	M16*42	14	48.5
150	50	82	87	200	297	374	M16*42	14	53.5

蜗杆尾出轴 (E) / Extension Worm Shaft (E)

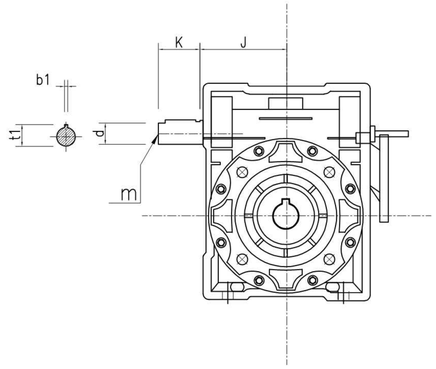

NMRV	J	d(j6)	K	m	b1	t1
025	37	9	20	—	3	10.2
030	45	9	20	—	3	10.2
040	53	11	23	—	4	12.5
050	64	14	30	M6	5	16
063	75	19	40	M6	6	21.5
075	90	24	50	M8	8	27
090	108	24	50	M8	8	27
110	135	28	60	M10	8	31
130	155	30	80	M10	8	33
150	175	35	80	M12	10	38

扭力臂 / Torque Arm

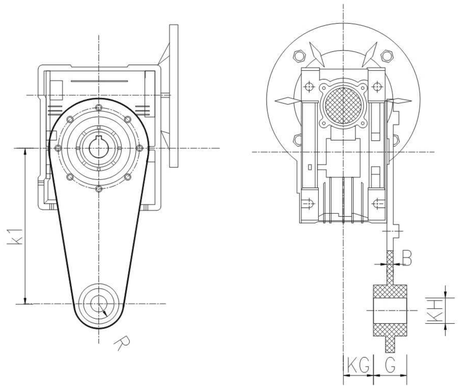

NMRV	K1	G	KG	KH	R	B
025	70	14	17.5	8	15	4
030	85	14	24	8	15	4
040	100	14	31.5	10	18	4
050	100	14	38.5	10	18	4
063	150	14	49	10	18	6
075	200	25	47.5	20	30	6
090	200	25	57.5	20	30	6
110	250	30	62	25	35	6
130	250	30	69	25	35	6
150	250	30	84	25	35	8

防尘盖 / Cover

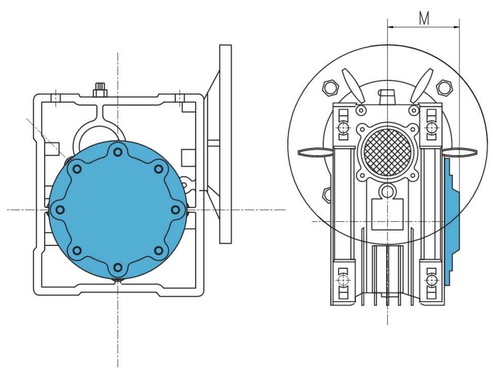

NMRV	M
030	42
040	50
050	58
063	69
075	74
090	85
110	94
130	102
150	117

安装方位图 / INSTALLATION POSITIONS DIAGRAM

输出法兰位置 / Position Diagram For Output Flange

FA1 / FB1 / FC1 / FD1 / FE1	FA2 / FB2 / FC2 / FD2 / FE2
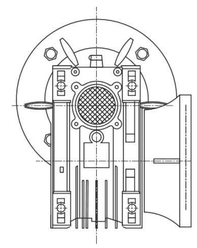	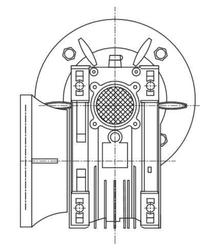

如果没有特殊要求，一般按出厂标准位置如图 F..1 方式和 B3 位置提供。

Unless specified otherwise,the gear units is supplied with the flange in pos. F..1referred to position B3.

单向输出轴位置 / Position Diagram For Single Output Shaft

SS1	SS2
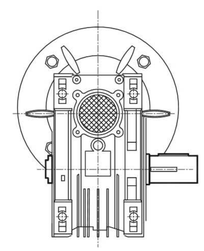	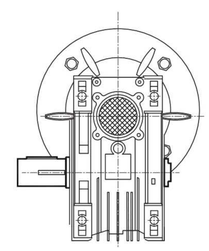

如果没有特殊要求，一般按出厂标准位置如图 SS1 方式和 B3 位置提供。

Unless specified otherwise,the gear units is supplied with the flange in pos. SS1 referred to position B3.

扭力臂 (A) 位置 / Torque Arm (A) Position

A1	A2
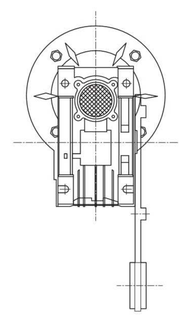	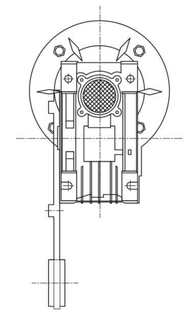

如果没有特殊要求，一般按出厂标准位置如图 A1 方式和 B3 位置提供。

Unless specified otherwise,the gear units is supplied with the flange in pos. A1 referred to position B3.

符号释意 / Symbols Used

符号 / Symbol	含义 / Meaning
	排气阀 Breather valve
	油位塞 Oil level plug
	放油塞 Oil drain plug

电机接线盒方位 / Position Of Motor Terminal Box

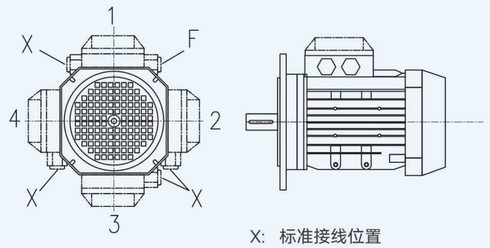

X: 标准接线位置
normal position

NMRV.. 安装方位 / Mounting Positions

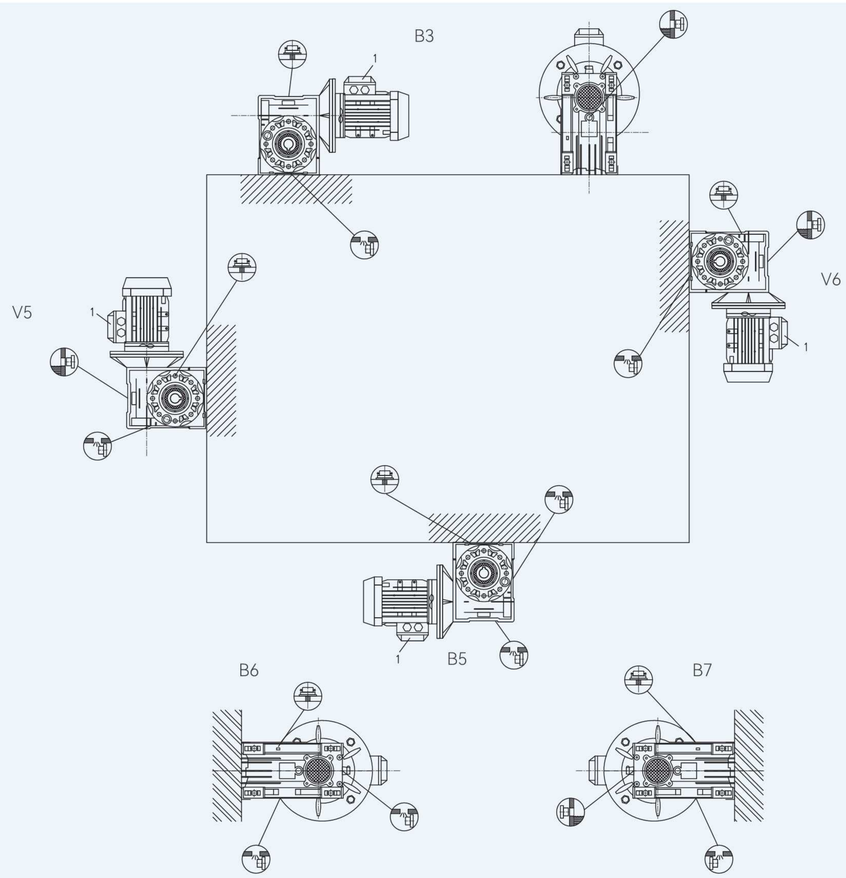

DRV.. 安装方位 / Mounting Positions

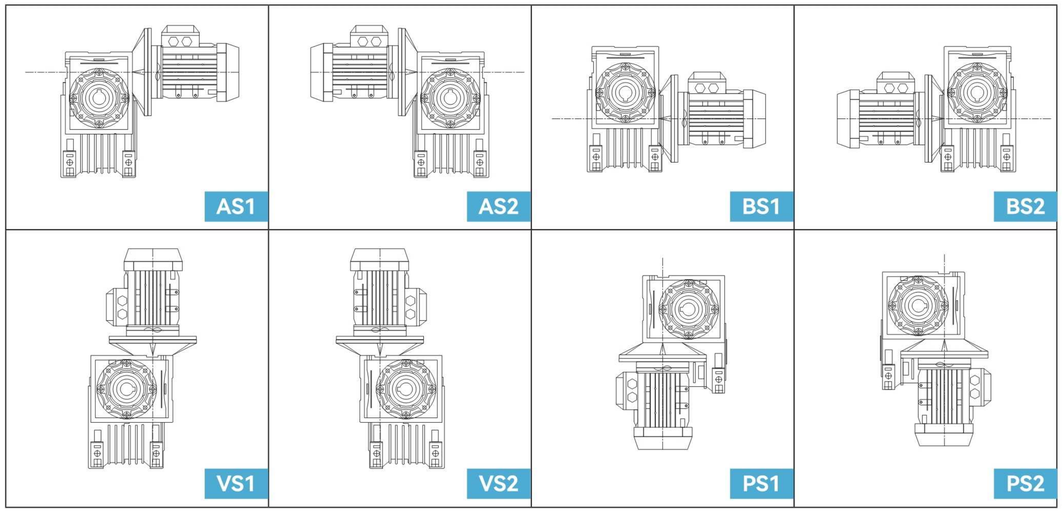

如果没有特殊要求，一般按出厂标准位置如图 AS2 组合方式和 B3 位置提供。

Unless specified otherwise,the gear units is supplied with the flange in pos. AS2 referred to position B3.

旋转方向 / Direction Of Rotation

NMRV、NRV
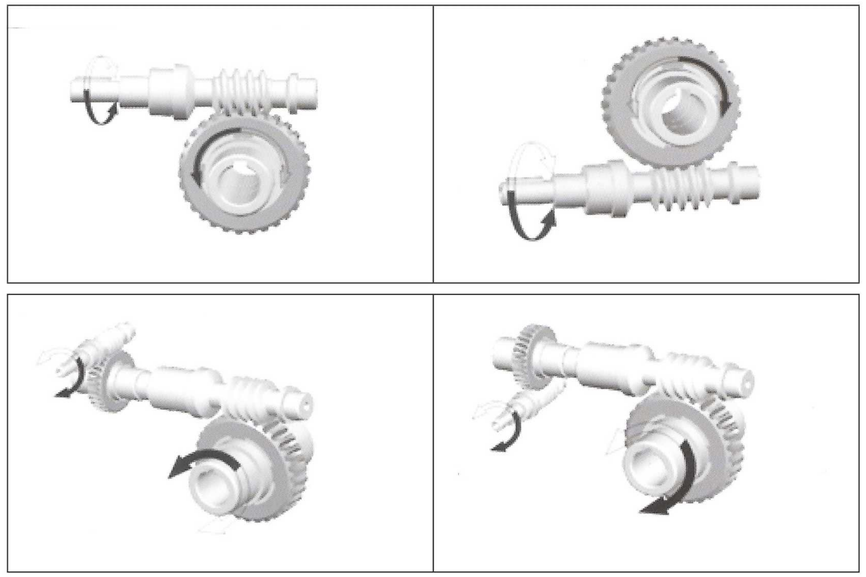
DRV